KORADO®

... heat for you

KORALUX

towel rail radiators - technical catalogue

02/2017

A quick access to most recent information

Read us in your mobile phone

You can view our offer also in your mobile phone. You just need to scan the **QR code** with the **QR reader** on your mobile phone. You will then be able to view the complete range of our KORALUX products on your mobile phone, including the overview of models, technical parameters and photo gallery.

The new plant KORADO, a.s. is with its technological equipment and organizational structure the most modern factory for the production of radiators in Europe.

Its modern and sophisticated set-up in the area of 30 000 m^2 enables further increases of production capacity whenever needed. The choice of all technology was driven by the maximum effort to ensure environment protection inside the factory as well as in its surroundings.

The company KORADO, a.s. obtained the ISO 9001 quality certificate in 1997 and currently already holds the ISO 9001:2008.

The KORALUX 02/2017 catalogue replaces all previous issues.

MODERN PRODUCTS WITH HIGH HEAT OUTPUT AND PROVEN QUALITY

KORADO, a.s. is introducing a comprehensive range of towel rail radiators. Thanks to modern production technologies our KORALUX radiators stand out with excellent quality and high heat outputs. The wide range of KORALUX radiators consists of five product lines which are competitively priced and comprehensively cover the demands of all target groups. The advantages and characteristics of the new product lines are tailored to meet the requirements of our customers on the basis of long-term experience. The names of the product lines – MAX, COMFORT, CLASSIC, STANDARD and EXCLUSIVE – suggest the advantages of each of them.

KORALUX MAX

The towel rail radiators KORALUX MAX are designed to provide the maximum heat output which is guaranteed by their unique design. The models offered in this range meet the requirements of even the most demanding customers.

Products are offered in two version, with straight or curved tubes, both with side or modern middle connection. This product range is the best choice for maximum heat output.

KORALUX COMFORT

Luxurious design, maximum comfort and outstanding heat output. The towel rail radiators in this range are a balanced combination of function and design. They belong to the most popular products.

Two versions, with straight or curved tubes, and a choice between bottom side or middle connection predestine this range to be a perfect complement for any interior. For a real comfortable use these radiators can be equipped with a set for combined heating.

MODERN PRODUCTS WITH HIGH HEAT OUTPUT AND PROVEN QUALITY

KORALUX CLASSIC

The most popular towel rail radiators, especially thanks to their competitive price and sufficient heat output. They represent an ideal combination of price, heat output and quality.

Again you can choose between two versions, straight or curved tubes, with side or middle connection.

KORALUX STANDARD

You will find the smallest towel rail radiators on the market in this range. With a width of 400 mm, they are ideal for use in small bathrooms or as an alternative heat source suitable for combination with another type of heating, for example, under-floor heating.

KORALUX EXCLUSIVE

Elegant chrome radiators will tastefully liven up every interior with their luxurious design. These radiator are available with a modern middle connection in two versions, with straight or curved tubes.

MODERN PRODUCTS WITH HIGH HEAT OUTPUT AND PROVEN QUALITY

KORALUX Variability

All KORALUX towel rail radiators are tailored to suit the requirements and demands of our customers. We place an emphasis on their design, wide range of uses and connection to the existing heating systems in buildings in traditional as well as modern style.

Another option is to use KORALUX towel rail radiators with a set for combined heating, or alternatively as direct electric heaters.

The range of colours enables you to fit in these radiators into any interior.

MODERN PRODUCTS WITH HIGH HEAT OUTPUT AND PROVEN QUALITY

KORADO Accessories

Drying your towels will be a pleasant side effect of heating and an additional function of your radiators. Thanks to the accessories offered, KORADO towel rail radiators can be used for efficient drying or storage of textiles such as towels or cloths without damaging the textiles or the radiator itself.

This is why the KORADO offer now includes towel hangers and pegs which extend the practical use of KORALUX towel rail radiators.

Clear and simple fitting allows for their use on new as well as old radiators.

TABLE OF CONTENTS

ADVANTAGES OF KORADO® RADIATORS

- made to last
- excellent finish
- low water content
- high resistance to excess pressure
- low weight
- multifunction packaging
- ISO 9001:2008 guarantee of quality of products and services

GENERAL INFORMATION

Description and Design

Towel rail radiators supplied under the trade name KORALUX, are manufactured from closed steel profiles of various diameters and shapes.

Overview of models KORALUX

- version MAX
  - KORALUX LINEAR MAX
  - KORALUX LINEAR MAX - M
  - KORALUX RONDO MAX
  - KORALUX RONDO MAX - M
- version COMFORT
  - KORALUX LINEAR COMFORT
  - KORALUX LINEAR COMFORT - M
  - KORALUX RONDO COMFORT
  - KORALUX RONDO COMFORT - M
- version CLASSIC
  - KORALUX LINEAR CLASSIC
  - KORALUX LINEAR CLASSIC - M
  - KORALUX RONDO CLASSIC
  - KORALUX RONDO CLASSIC - M
- version STANDARD
  - KORALUX STANDARD
- version EXCLUSIVE
  - KORALUX LINEAR EXCLUSIVE - M
  - KORALUX RONDO EXCLUSIVE - M

High Quality Finish

The technology used guarantees long-term corrosion resistance, mechanical durability, extremely good finish and also a hygienic radiator surface. Maximum effort is made to protect the environment.

The finish is done in three basic phases:

1) Preparation of the steel surface – includes degreasing, phosphating, and rinsing in three stages.
2) Putting on the first layer of paint using the cataphoretic method (KTL) and drying in an oven. This phase of treatment is of decisive importance for the long life span of the radiator.
3) Putting on the final layer of paint – epoxy-polyester powder is used. After it is oven dried and then cooled, the process of surface finishing is complete.

The basic colour is white RAL 9016. On special order you can get radiators in other colours selected from our colour card.

Basic Equipment

The distributing and collector profiles are equipped with outlets with G 1/2 thread. Included with every towel rail radiator are a blanking plug and air vent and a set of fittings for fixing the radiator to the wall.

Use

KORALUX towel rail radiators are primarily intended for heating bathrooms, toilets, kitchens, living spaces, offices, entrances and hallways of residential and public buildings. Their modern design allows them to blend in with most interiors and the choice of colours meets the requirements for good colour combinations.

Their design allows for their use in both gravity fed and pressurized hot water systems with the maximum water temperature up to 110 °C. Radiators must be installed in a professional way in hot water heating systems which are carried out professionally according to VDI 2035 with regard to the protection against damage caused by corrosion and scale.

The following main water quality attributes must be adhered to:

- pH range 8.5 - 9.5 (this applies for systems which do not contain aluminium)
- overall water hardness (content of Ca + Mg ions) up to 1mmol/l
- salinity within the range 300 - 500 µS/cm
- oxygen content max. 0.1 mg/l.

Guarantee and Quality

The manufacturer guarantees that the product is leak proof and guarantees stated heat output of KORALUX towel rail radiators connected to the hot-water systems for 5 years from the date of sale. The manufacturer accepts no responsibility for deformation or damage of the radiators caused during their transport, handling, or storage. The guarantee does not apply to mechanical or other damages caused by unqualified installation of the radiators.

The company KORADO, a.s. has held a quality certificate under the norm ISO 9001 since 1997. This quality control system describes all conditions, requirements, and parameters with respect to technical, manufacturing, commercial, transport, and service issues. The customer is the main target of the entire system and his satisfaction influences the goals and plans of the company KORADO, a.s.

The ISO 9001:2008 quality control system guarantees the customer excellent, long-lasting quality of products and services.

Heat Output and Declaration of Conformity

The stated heat outputs are determined in accordance with EN 442 in a notified laboratory.

The conformity with valid European standards was approved by Strojirensky zkusebni ustav, s.p. (Engineering Test Institute), Notified Body 1015, Hudcova 56b, 621 00 Brno, Czech Republic.

Electric Direct-Heating

KORALUX towel rail radiators can be produced as independent direct-heating electric radiators. The radiators are fitted with an electric heater equipped with a temperature limiter and are filled with antifreeze. This enables their use in buildings where the temperature can be expected to drop to -10 °C.

The electric heater is connected to the main distribution frame by cable connected to the wiring box or the socket, if fitted with additional equipment the required comfort and economy levels are dependent on the following:

- the VS1 plug with manual control (order code Z-SKV-0002)
- the RE10A electric temperature regulator (order code Z-SKV-0004)

The KORALUX direct-heating electric radiators can only be positioned vertically during installation and do not require either assembly or a safety pressure device for their operation.

KORALUX models are produced in the following versions:
KORALUX LINEAR MAX - E
KORALUX RONDO MAX - E
KORALUX LINEAR COMFORT - E
KORALUX RONDO COMFORT - E
KORALUX LINEAR CLASSIC - E
KORALUX RONDO CLASSIC - E

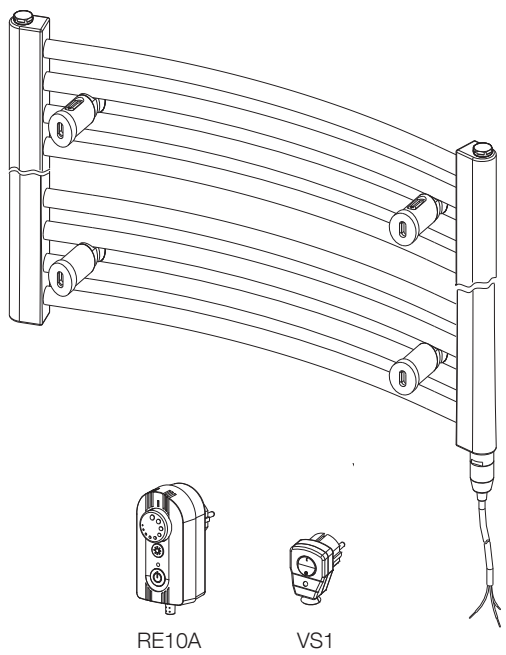

Technical Data	KORALUX - E direct-heating electric radiator
Rated voltage	230 V / 50 Hz
Output range	200 ÷ 900 W
Temperature limiter	max. 90 °C
Protection	IP 44
Appliance class	1
Cable length	1,5 m
Working position	Vertical model with the electric power supply at the bottom

For basic technical data of accessories to direct electric radiators KORALUX - E see please p. 38.

Packaging

KORALUX towel rail radiators are delivered with plastic protective corners, packed in cardboard and polyethylene shrink wrap. For assembly we recommend removing the packaging only in places where it is necessary, and not to remove the rest before the building work is completed. In this way the surface of the radiator is protected against dirt and damage.

Transport and storage

The radiators are stored on pallets according to the manufacturer's internal guidelines. Placing the pallets into layers is possible only in accordance with those guidelines.

Pallets with radiators should only be transported in covered vehicles and stored in a dry sheltered place. Their storage in open and uncovered places is not permissible.

Packaging – Palletizing

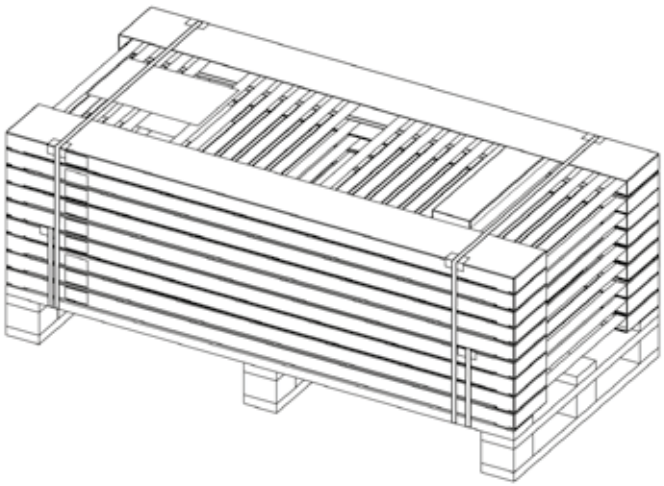

KORALUX radiators

KORALUX LINEAR MAX, LINEAR MAX - M

Technical Data

Height H	690, 900, 1215, 1495, 1810 mm
Length L	450, 600, 750 mm
Depth B	35 mm
Connecting pitch (KLM)	**h = L** - 30 mm
Connecting pitch (KLMM)	50 mm
Connecting thread (KLM)	4 x G 1/2 inside
Connecting thread (KLMM)	6 x G 1/2 inside
Highest allowed working pressure	10 bar
Test presure	13 bar
Maximum water temperature	110 °C
Flow coefficient (KLM)	A_T = 2,1 x 10^{-4} m^2
Flow coefficient (KLMM)	A_T = 9,3 x 10^{-5} m^2
Coefficient of resistance (KLM)	ξ_T = 1,8
Coefficient of resistance (KLMM)	ξ_T = 9,3

Design

KORALUX LINEAR MAX (KLM) is a towel rail radiator with **bottom connection from the bottom down** with connecting pitch **h** derived from its length **L**. The design of the radiator also allows for **double sided connection from the top down.**

KORALUX LINEAR MAX - M (KLMM) is a towel rail radiator modified for **bottom middle connection** with a connecting pitch of 50 mm.

Steel tubes	∅ 24 mm
Steel profile	41 x 35 mm

Fitting

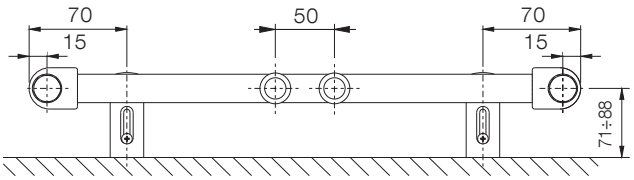

The mounting set is delivered as standard and consists of 4 special plastic brackets, screws, dowels and assembly instructions.

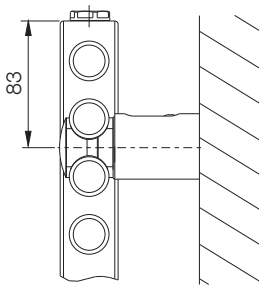

Type of Connection KORALUX LINEAR MAX

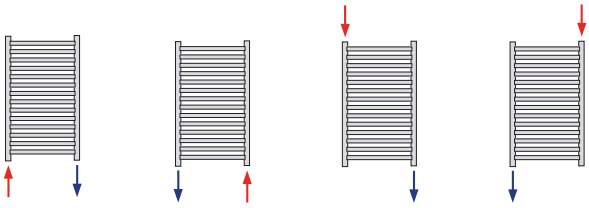

bottom connection

double - sided from the top down

Type of Connection KORALUX LINEAR MAX - M

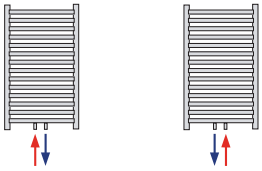

bottom middle*

* For radiators with the bottom middle connection you can use the integrated connection fittings HM delivered together with a thermostatic head (see catalogue KORALUX p. 39).

KORALUX LINEAR MAX

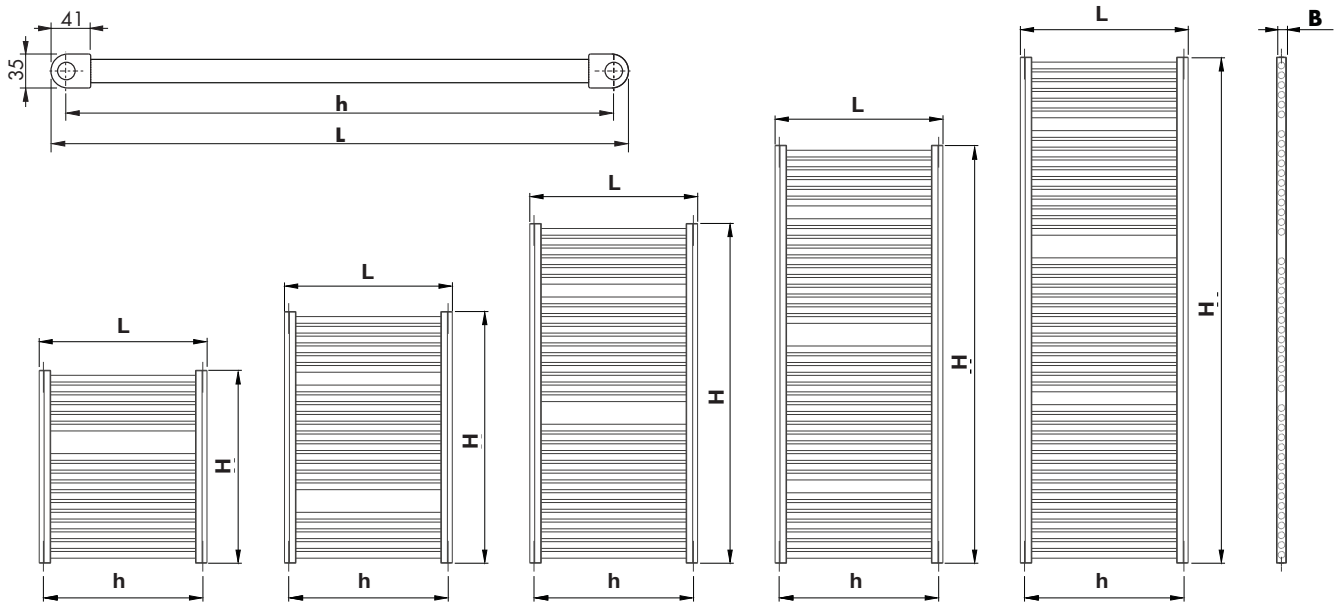

KLM 700... KLM 900... KLM 1220... KLM 1500... KLM 1820...

KORALUX LINEAR MAX - M

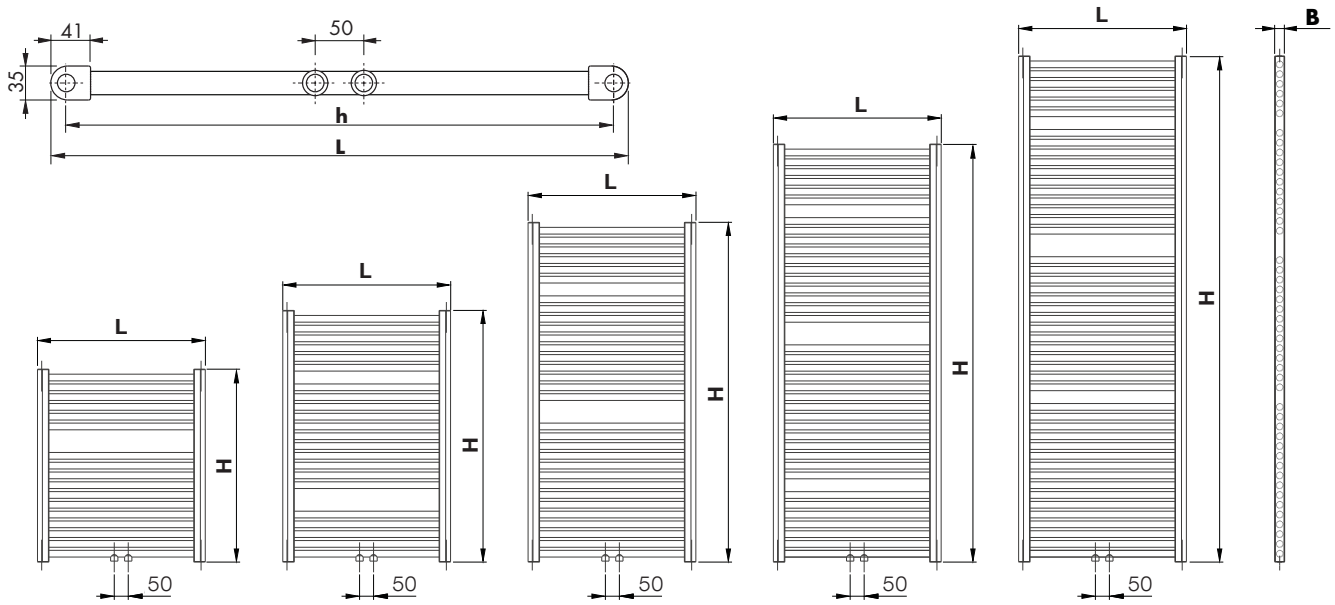

KLMM 700... KLMM 900... KLMM 1220... KLMM 1500... KLMM 1820...

KORALUX LINEAR MAX - E electric radiators

Model number	Electric input P [W]	M_c [kg]
KLME 700.450	200	10,0
KLME 700.600	200	12,3
KLME 700.750	300	14,7
KLME 900.450	200	12,8
KLME 900.600	300	15,9
KLME 900.750	400	19,0
KLME 1220.450	300	17,6
KLME 1220.600	400	22,0

Model number	Electric input P [W]	M_c [kg]
KLME 1220.750	500	26,3
KLME 1500.450	400	21,6
KLME 1500.600	600	27,0
KLME 1500.750	700	32,3
KLME 1820.450	500	26,3
KLME 1820.600	700	33,0
KLME 1820.750	800	39,8

M_c = total weight of the radiator including electric heating element and filler

The company reserves the right to make technical changes.

KORALUX LINEAR MAX, LINEAR MAX - M

HEAT OUTPUT Q [W] FOR WATER AS A HEAT-CARRYING AGENT CERTIFIED TO EN 442

BASIC TECHNICAL PARAMETERS

Model number	H [mm]	L [mm]	h [mm]	t_1/t_2 [°C]	Q [W] for t_i[°C]					Nominal heat output Q [W] (75/65/20°C)	Temperature exponent n [-]	Radiator weight M_T [kg]	Water volume V_T [l]	Max. heat output E - element P [W]*
					15	18	20	22	24					
KLM 700.450	690	450	420	90/70	440	415	398	381	365	320	1,2363	5,8	3,9	200
KLMM 700.450			50	70/55	298	275	259	244	229					
				55/45	205	183	169	155	141					
KLM 700.600	690	600	570	90/70	582	548	526	504	482	422	1,2476	7,3	4,9	200
KLMM 700.600			50	70/55	393	362	341	321	301					
				55/45	269	240	221	203	185					
KLM 700.750	690	750	720	90/70	725	682	654	626	599	524	1,2588	8,8	5,8	300
KLMM 700.750			50	70/55	488	449	423	398	373					
				55/45	333	297	273	250	227					
KLM 900.450	900	450	420	90/70	567	534	512	490	469	411	1,2465	7,5	5,1	200
KLMM 900.450			50	70/55	383	353	333	313	293					
				55/45	262	234	216	198	180					
KLM 900.600	900	600	570	90/70	751	707	678	649	620	543	1,2560	9,4	6,3	300
KLMM 900.600			50	70/55	506	465	439	412	386					
				55/45	345	308	284	260	236					
KLM 900.750	900	750	720	90/70	933	878	841	805	770	673	1,2655	11,3	7,6	400
KLMM 900.750			50	70/55	627	576	543	510	478					
				55/45	427	380	350	320	291					
KLM 1220.450	1215	450	420	90/70	771	726	696	666	637	557	1,2627	10,4	7,0	300
KLMM 1220.450			50	70/55	519	477	450	422	396					
				55/45	353	315	290	265	241					
KLM 1220.600	1215	600	570	90/70	1021	960	921	881	842	736	1,2695	13,0	8,8	400
KLMM 1220.600			50	70/55	685	630	593	557	522					
				55/45	466	415	382	349	317					
KLM 1220.750	1215	750	720	90/70	1269	1193	1143	1094	1045	913	1,2762	15,7	10,6	500
KLMM 1220.750			50	70/55	850	781	735	690	646					
				55/45	577	513	472	432	392					
KLM 1500.450	1495	450	420	90/70	951	895	858	821	785	686	1,2689	12,7	8,6	400
KLMM 1500.450			50	70/55	639	587	553	520	486					
				55/45	434	387	356	326	296					
KLM 1500.600	1495	600	570	90/70	1255	1181	1132	1084	1036	906	1,2647	15,9	10,8	600
KLMM 1500.600			50	70/55	844	776	731	687	643					
				55/45	575	512	471	431	392					
KLM 1500.750	1495	750	720	90/70	1555	1464	1404	1344	1284	1124	1,2604	19,2	13,0	700
KLMM 1500.750			50	70/55	1047	963	908	853	799					
				55/45	714	637	586	536	487					
KLM 1820.450	1810	450	420	90/70	1157	1089	1043	998	954	833	1,2760	15,5	10,6	500
KLMM 1820.450			50	70/55	775	712	671	630	590					
				55/45	526	468	431	394	357					
KLM 1820.600	1810	600	570	90/70	1523	1434	1375	1316	1258	1101	1,2592	19,6	13,3	700
KLMM 1820.600			50	70/55	1026	943	889	836	783					
				55/45	700	624	574	526	478					
KLM 1820.750	1810	750	720	90/70	1883	1774	1702	1630	1559	1367	1,2424	23,6	15,9	800
KLMM 1820.750			50	70/55	1275	1174	1107	1041	976					
				55/45	874	780	719	659	600					

* Stated maximum output values of the electric heating element apply for combined heating (see p. 38)

Characteristic equation: $\Phi = K_T \bullet L^a \bullet H^b \bullet \Delta T^{(c_0+c_1 \cdot H)}$

K_T	a	b	c_0	c_1
$9{,}84220 \times 10^{-6}$	0,9681392	0,9869175	1,2540313	$3{,}58067 \times 10^{-6}$

Stated heat output values apply for the illustrated types of radiator connections:

HEAT OUTPUT Q [W] FOR WATER AS A HEAT-CARRYING AGENT CERTIFIED TO EN 442

BASIC TECHNICAL PARAMETERS

Model number	H [mm]	L [mm]	h [mm]	t_1/t_2 [°C]	Q [W] for t_i [°C]					Nominal heat output Q [W] (75/65/20°C)	Temperature exponent n [-]	Radiator weight M_T [kg]	Water volume V_T [l]	Max. heat output E - element P [W]*
					15	18	20	22	24					
KLM 700.450	690	450	420	90/70	474	446	427	409	390	341	1,2765	5,8	3,9	200
				70/55	317	292	275	258	241					
				55/45	215	192	176	161	146					
KLM 700.600	690	600	570	90/70	629	592	567	543	519	454	1,2651	7,3	4,9	200
				70/55	423	389	366	344	322					
				55/45	288	257	236	216	196					
KLM 700.750	690	750	720	90/70	783	737	707	677	648	567	1,2537	8,8	5,8	300
				70/55	528	486	458	431	404					
				55/45	361	322	297	272	247					
KLM 900.450	900	450	420	90/70	607	570	547	523	499	436	1,2816	7,5	5,1	200
				70/55	406	373	351	329	308					
				55/45	275	245	225	205	186					
KLM 900.600	900	600	570	90/70	804	757	725	694	663	580	1,2694	9,4	6,3	300
				70/55	540	496	468	439	411					
				55/45	367	327	301	275	250					
KLM 900.750	900	750	720	90/70	1002	944	905	866	828	725	1,2572	11,3	7,6	400
				70/55	675	621	586	551	516					
				55/45	461	411	379	346	315					
KLM 1220.450	1215	450	420	90/70	825	776	743	711	679	592	1,2896	10,4	7,0	300
				70/55	551	505	476	446	417					
				55/45	372	331	304	278	252					
KLM 1220.600	1215	600	570	90/70	1096	1031	988	945	903	789	1,2762	13,0	8,8	400
				70/55	734	675	635	597	558					
				55/45	498	444	408	373	338					
KLM 1220.750	1215	750	720	90/70	1364	1284	1231	1178	1126	985	1,2627	15,7	10,6	500
				70/55	917	844	795	747	700					
				55/45	625	557	513	469	426					
KLM 1500.450	1495	450	420	90/70	1027	965	924	883	843	735	1,2967	12,7	8,6	400
				70/55	683	627	590	553	517					
				55/45	461	409	376	343	311					
KLM 1500.600	1495	600	570	90/70	1362	1281	1227	1174	1121	979	1,2821	15,9	10,8	600
				70/55	911	836	788	739	692					
				55/45	617	549	505	461	418					
KLM 1500.750	1495	750	720	90/70	1694	1594	1528	1462	1398	1222	1,2676	19,2	13,0	700
				70/55	1138	1046	985	926	867					
				55/45	774	690	635	580	527					
KLM 1820.450	1810	450	420	90/70	1268	1191	1140	1090	1040	906	1,3048	15,5	10,6	500
				70/55	842	772	726	681	636					
				55/45	566	503	462	421	381					
KLM 1820.600	1810	600	570	90/70	1681	1580	1514	1448	1382	1206	1,2890	19,6	13,3	700
				70/55	1122	1029	969	909	851					
				55/45	758	674	619	566	513					
KLM 1820.750	1810	750	720	90/70	2092	1968	1886	1805	1725	1507	1,2731	23,6	15,9	800
				70/55	1403	1289	1214	1140	1067					
				55/45	953	849	780	714	648					

* Stated maximum output values of the electric heating element apply for combined heating (see p. 38)

Characteristic equation: $\Phi = K_T \bullet L^a \bullet H^b \bullet \Delta T^{(c_0+c_1 \cdot H)}$	K_T	a	b	c_0	c_1
	$1{,}79486 \times 10^{-5}$	0,9970127	0,8795569	1,2322031	$3{,}12713 \times 10^{-5}$

Stated heat output values apply for the illustrated types of radiator connections:

KLM

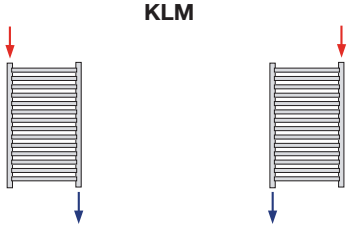

double - sided from the top down

KORALUX RONDO MAX, RONDO MAX - M

Technical Data

Height H	690, 900, 1215, 1495, 1810 mm
Length L	445, 595, 745 mm
Depth B	59, 65, 69 mm
Connecting pitch (KRM)	**h = L** - 30 mm
Connecting pitch (KRMM)	50 mm
Connecting thread (KRM)	4 x G 1/2 inside
Connecting thread (KRMM)	6 x G 1/2 inside
Highest allowed working pressure	10 bar
Test presure	13 bar
Maximum water temperature	110 °C
Flow coefficient (KRM)	A_T = 2,1 x 10^{-4} m^2
Flow coefficient (KRMM)	A_T = 9,3 x 10^{-5} m^2
Coefficient of resistance (KRM)	ξ_T = 1,8
Coefficient of resistance (KRMM)	ξ_T = 9,3

Fitting

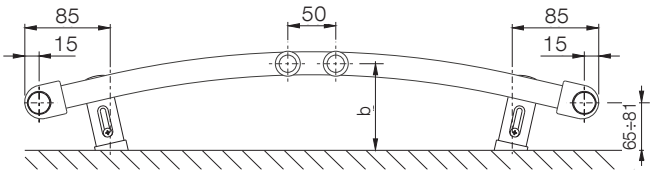

L [mm]	445	595	745
b [mm]	94 ÷ 110	100 ÷ 116	104 ÷ 120

The mounting set is delivered as standard and consists of 4 special plastic brackets, screws, dowels and assembly instructions.

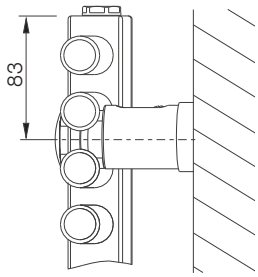

Design

KORALUX RONDO MAX (KRM) is a towel rail radiator with **bottom connection from the bottom down** with connecting pitch **h** derived from its length **L**. The design of the radiator also allows for **double sided connection from the top down.**

KORALUX RONDO MAX - M (KRMM) is a towel rail radiator modified for **bottom middle connection** with a connecting pitch of 50 mm.

Steel tubes	∅ 24 mm
Steel profile	41 x 35 mm

Type of Connection KORALUX RONDO MAX

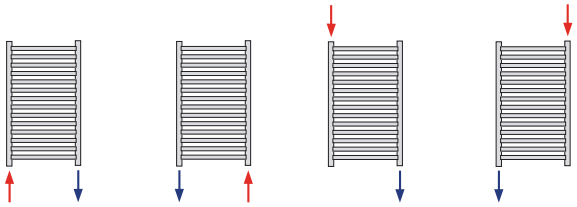

bottom connection

double - sided from the top down

Type of Connection KORALUX RONDO MAX - M

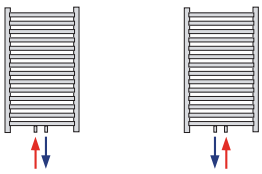

bottom middle*

* For radiators with the bottom middle connection you can use the integrated connection fittings HM delivered together with a thermostatic head (see catalogue KORALUX p. 39).

KORALUX RONDO MAX

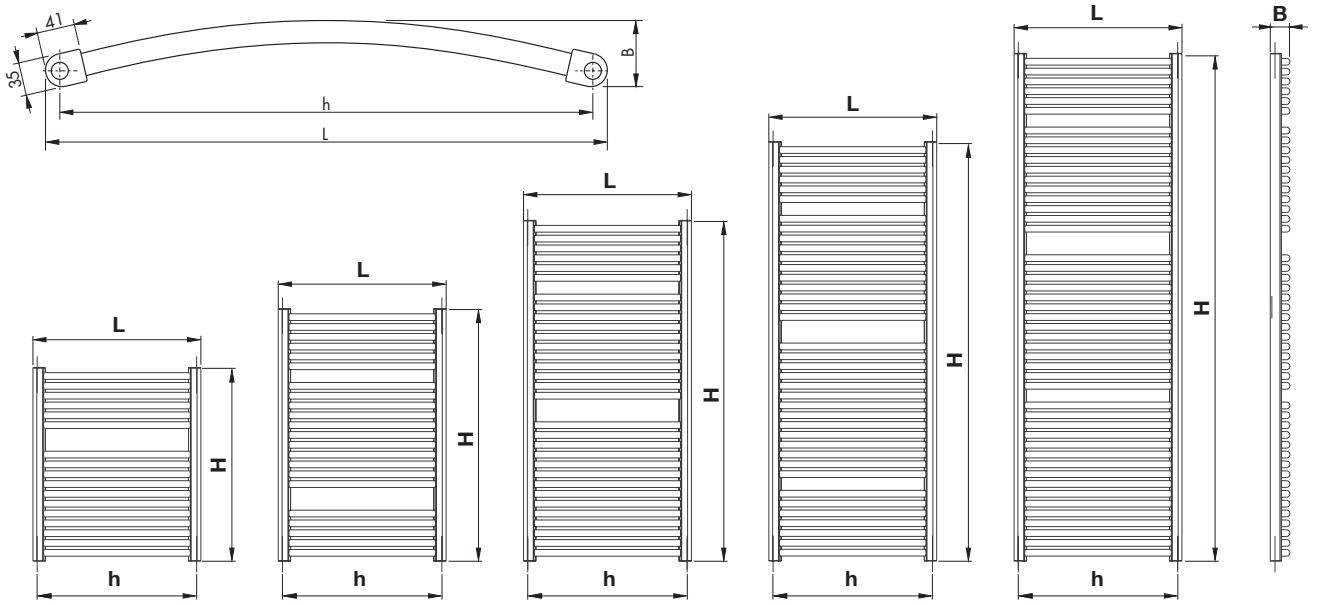

KRM 700... KRM 900... KRM 1220... KRM 1500... KRM 1820...

KORALUX RONDO MAX - M

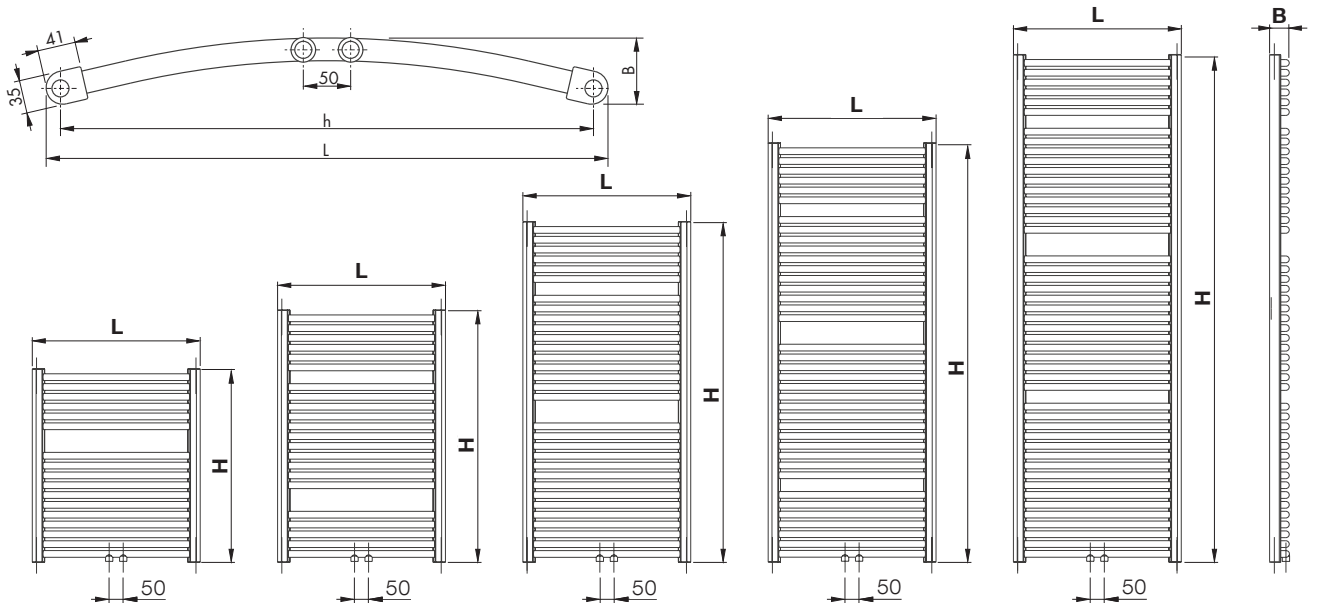

KRMM 700... KRMM 900... KRMM 1220... KRMM 1500... KRMM 1820...

KORALUX RONDO MAX - E electric radiators

Model number	Electric input P [W]	M_c [kg]
KRME 700.450	200	10,0
KRME 700.600	200	12,3
KRME 700.750	300	14,7
KRME 900.450	200	12,9
KRME 900.600	300	15,9
KRME 900.750	400	19,0
KRME 1220.450	300	17,6
KRME 1220.600	400	22,0

Model number	Electric input P [W]	M_c [kg]
KRME 1220.750	600	26,3
KRME 1500.450	400	21,6
KRME 1500.600	600	27,0
KRME 1500.750	700	32,3
KRME 1820.450	500	26,3
KRME 1820.600	700	33,1
KRME 1820.750	900	39,8

M_c = total weight of the radiator including electric heating element and filler

The company reserves the right to make technical changes.

KORALUX RONDO MAX, RONDO MAX - M

HEAT OUTPUT Q [W] FOR WATER AS A HEAT-CARRYING AGENT CERTIFIED TO EN 442

BASIC TECHNICAL PARAMETERS

Model number	H [mm]	L [mm]	h [mm]	t_1/t_2 [°C]	Q [W] for t_i[°C]					Nominal heat output Q [W] (75/65/20°C)	Temperature exponent n [-]	Radiator weight M_T [kg]	Water volume V_T [l]	Max. heat output E - element P [W]*
					15	18	20	22	24					
KRM 700.450	690	445	415	90/70	460	434	416	399	382	335	1,2322	5,8	3,9	200
KRMM 700.450			50	70/55	313	288	272	256	240					
				55/45	215	192	177	162	148					
KRM 700.600	690	595	565	90/70	609	574	551	528	506	444	1,2279	7,3	4,9	200
KRMM 700.600			50	70/55	414	382	360	339	318					
				55/45	285	255	235	216	197					
KRM 700.750	690	745	715	90/70	758	715	686	658	629	553	1,2235	8,8	5,8	300
KRMM 700.750			50	70/55	516	476	449	423	397					
				55/45	356	318	294	270	246					
KRM 900.450	900	445	415	90/70	594	560	537	515	492	432	1,2336	7,5	5,1	200
KRMM 900.450			50	70/55	403	371	350	330	309					
				55/45	277	248	228	209	191					
KRM 900.600	900	595	565	90/70	789	744	714	684	654	574	1,2343	9,4	6,3	300
KRMM 900.600			50	70/55	535	493	466	438	411					
				55/45	368	329	303	278	253					
KRM 900.750	900	745	715	90/70	982	925	888	851	814	714	1,2350	11,3	7,6	400
KRMM 900.750			50	70/55	666	614	579	545	511					
				55/45	458	409	377	346	315					
KRM 1220.450	1215	445	415	90/70	810	763	732	702	671	589	1,2357	10,4	7,0	300
KRMM 1220.450			50	70/55	549	506	478	449	421					
				55/45	377	337	311	285	260					
KRM 1220.600	1215	595	565	90/70	1076	1014	973	932	891	781	1,2446	13,0	8,8	400
KRMM 1220.600			50	70/55	728	670	632	595	557					
				55/45	499	445	410	376	342					
KRM 1220.750	1215	745	715	90/70	1344	1265	1214	1162	1111	973	1,2534	15,7	10,6	600
KRMM 1220.750			50	70/55	907	834	787	739	693					
				55/45	620	553	509	466	424					
KRM 1500.450	1495	445	415	90/70	997	940	902	864	827	725	1,2376	12,7	8,6	400
KRMM 1500.450			50	70/55	676	623	588	553	518					
				55/45	464	415	382	351	319					
KRM 1500.600	1495	595	565	90/70	1324	1247	1197	1147	1097	962	1,2384	15,9	10,8	600
KRMM 1500.600			50	70/55	897	826	780	734	688					
				55/45	616	550	507	465	423					
KRM 1500.750	1495	745	715	90/70	1647	1552	1489	1427	1365	1197	1,2392	19,2	13,0	700
KRMM 1500.750			50	70/55	1116	1028	970	913	856					
				55/45	766	684	631	578	526					
KRM 1820.450	1810	445	415	90/70	1210	1140	1094	1048	1002	879	1,2398	15,5	10,6	500
KRMM 1820.450			50	70/55	820	755	712	670	628					
				55/45	562	502	463	424	386					
KRM 1820.600	1810	595	565	90/70	1602	1510	1449	1388	1328	1166	1,2314	19,6	13,3	700
KRMM 1820.600			50	70/55	1088	1002	946	890	835					
				55/45	748	669	617	566	515					
KRM 1820.750	1810	745	715	90/70	1990	1876	1801	1727	1653	1452	1,2229	23,6	15,9	900
KRMM 1820.750			50	70/55	1355	1250	1180	1111	1043					
				55/45	935	836	772	708	645					

* Stated maximum output values of the electric heating element apply for combined heating (see p. 38)

Characteristic equation: $\Phi = K_T \bullet L^a \bullet H^b \bullet \Delta T^{(c_0+c_1.H)}$

K_T	a	b	c_0	c_1
$7{,}05757 \times 10^{-6}$	0,9827370	1,0420520	1,2429590	$-6{,}77537 \times 10^{-6}$

Stated heat output values apply for the illustrated types of radiator connections:

KORALUX RONDO MAX

HEAT OUTPUT Q [W] FOR WATER AS A HEAT-CARRYING AGENT CERTIFIED TO EN 442

BASIC TECHNICAL PARAMETERS

Model number	H [mm]	L [mm]	h [mm]	t_1/t_2 [°C]	Q [W] for t_i[°C]					Nominal heat output Q [W] (75/65/20°C)	Temperature exponent n [-]	Radiator weight M_T [kg]	Water volume V_T [l]	Max. heat output E - element P [W]*
					15	18	20	22	24					
KRM 700.450	690	445	415	90/70	500	471	451	432	413	361	1,2660	5,8	3,9	200
				70/55	336	309	291	274	256					
				55/45	229	204	188	172	156					
KRM 700.600	690	595	565	90/70	663	625	599	573	548	480	1,2554	7,3	4,9	200
				70/55	447	411	388	365	342					
				55/45	305	272	251	230	209					
KRM 700.750	690	745	715	90/70	826	778	746	715	683	599	1,2448	8,8	5,8	300
				70/55	558	514	485	456	428					
				55/45	383	342	315	288	262					
KRM 900.450	900	445	415	90/70	640	603	578	553	528	462	1,2674	7,5	5,1	200
				70/55	430	395	373	350	328					
				55/45	293	261	240	219	199					
KRM 900.600	900	595	565	90/70	849	799	766	734	701	614	1,2568	9,4	6,3	300
				70/55	572	526	496	466	437					
				55/45	390	348	321	294	267					
KRM 900.750	900	745	715	90/70	1058	996	955	915	875	767	1,2462	11,3	7,6	400
				70/55	715	658	621	584	547					
				55/45	490	437	403	369	336					
KRM 1220.450	1215	445	415	90/70	867	816	782	748	715	625	1,2697	10,4	7,0	300
				70/55	582	535	504	473	443					
				55/45	396	352	324	297	269					
KRM 1220.600	1215	595	565	90/70	1151	1083	1039	995	951	832	1,2591	13,0	8,8	400
				70/55	775	713	672	632	592					
				55/45	529	471	434	397	361					
KRM 1220.750	1215	745	715	90/70	1432	1349	1294	1239	1185	1038	1,2485	15,7	10,6	600
				70/55	967	890	840	790	740					
				55/45	662	591	544	499	454					
KRM 1500.450	1495	445	415	90/70	1070	1007	965	923	882	771	1,2717	12,7	8,6	400
				70/55	718	660	621	584	546					
				55/45	488	434	400	365	332					
KRM 1500.600	1495	595	565	90/70	1420	1337	1281	1227	1173	1026	1,2611	15,9	10,8	600
				70/55	956	879	828	778	729					
				55/45	651	581	535	489	445					
KRM 1500.750	1495	745	715	90/70	1767	1664	1596	1528	1461	1280	1,2505	19,2	13,0	700
				70/55	1193	1098	1035	973	912					
				55/45	816	728	671	614	559					
KRM 1820.450	1810	445	415	90/70	1308	1230	1179	1128	1078	942	1,2740	15,5	10,6	500
				70/55	877	806	759	713	667					
				55/45	595	530	488	446	405					
KRM 1820.600	1810	595	565	90/70	1735	1633	1566	1499	1432	1253	1,2634	19,6	13,3	700
				70/55	1167	1073	1011	950	890					
				55/45	795	709	652	597	542					
KRM 1820.750	1810	745	715	90/70	2160	2034	1951	1868	1786	1564	1,2528	23,6	15,9	900
				70/55	1457	1341	1264	1189	1114					
				55/45	996	889	819	749	681					

* Stated maximum output values of the electric heating element apply for combined heating (see p. 38)

Characteristic equation: $\Phi = K_T \bullet L^a \bullet H^b \bullet \Delta T^{(c_0+c_1 \cdot H)}$	K_T	a	b	c_0	c_1
	$1{,}48816 \times 10^{-5}$	0,9921830	0,9269310	1,2332500	$1{,}67629 \times 10^{-5}$

Stated heat output values apply for the illustrated types of radiator connections:

KRM

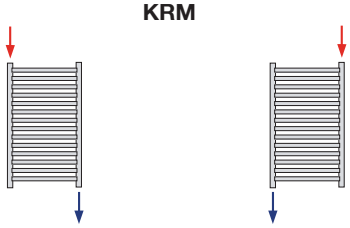

double - sided from the top down

KORALUX LINEAR COMFORT, LINEAR COMFORT - M

Technical Data

Height H	700, 900, 1220, 1500, 1820 mm
Length L	450, 500, 600, 750 mm
Depth B	35 mm
Connecting pitch (KLT)	**h = L** - 30 mm
Connecting pitch (KLTM)	50 mm
Connecting thread (KLT)	4 x G 1/2 inside
Connecting thread (KLTM)	6 x G 1/2 inside
Highest allowed working pressure	10 bar
Test presure	13 bar
Maximum water temperature	110 °C
Flow coefficient (KLT)	A_T = 2,1 x 10^{-4} m^2
Flow coefficient (KLTM)	A_T = 9,3 x 10^{-5} m^2
Coefficient of resistance (KLT)	ξ_T = 1,8
Coefficient of resistance (KLTM)	ξ_T = 9,3

Design

KORALUX LINEAR COMFORT (KLT) is a towel rail radiator with **bottom connection from the bottom down** with connecting pitch **h** derived from its length **L**. The design of the radiator also allows for **double sided connection from the top down**.

KORALUX LINEAR COMFORT - M (KLTM) is a towel rail radiator modified for **bottom middle connection** with a connecting pitch of 50 mm.

Steel tubes ∅ 24 mm
Steel profile 41 x 35 mm

Fitting

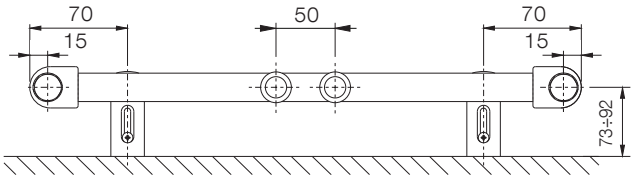

The mounting set is delivered as standard and consists of 4 special plastic brackets, screws, dowels and assembly instructions.

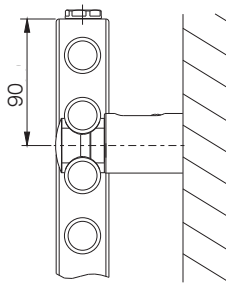

Type of Connection KORALUX LINEAR COMFORT

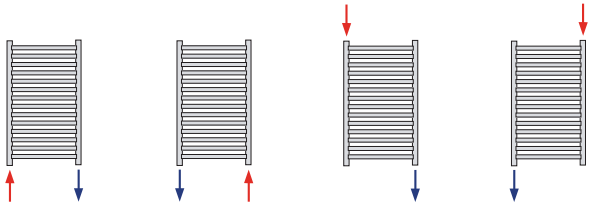

bottom connection

double - sided from the top down

Type of Connection KORALUX LINEAR COMFORT - M

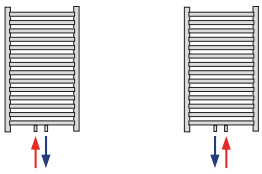

bottom middle*

*For radiators with the bottom middle connection you can use the integrated connection fittings HM delivered together with a thermostatic head (see page 39).

KORALUX LINEAR COMFORT

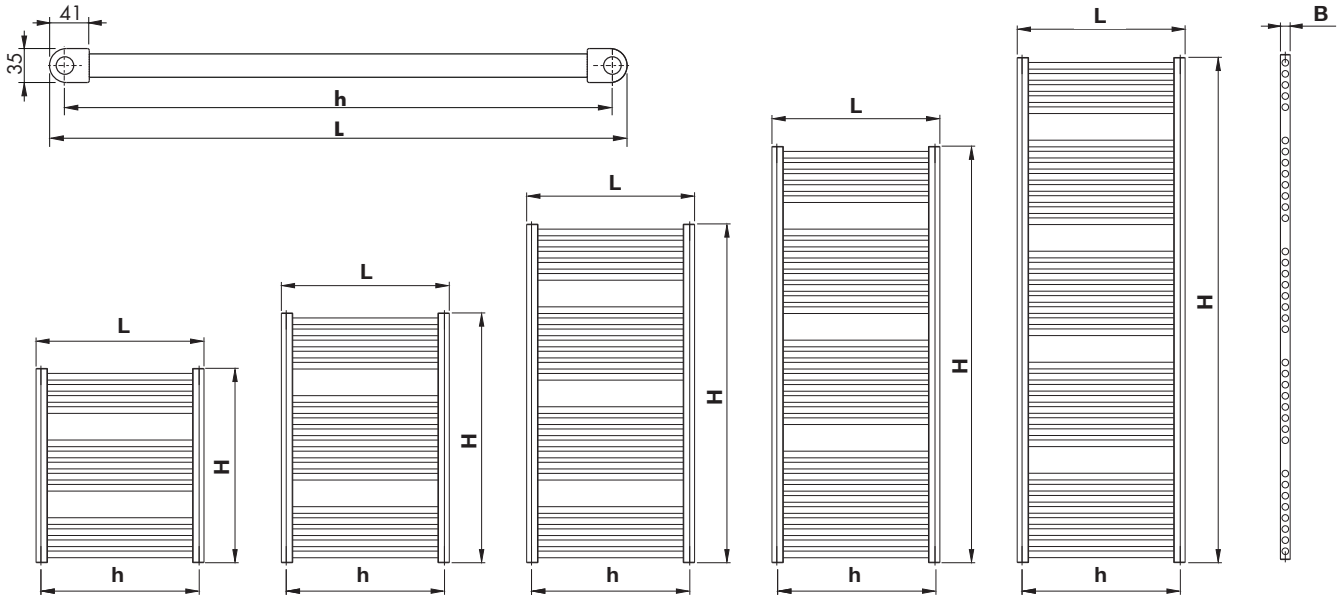

KLT 700... KLT 900... KLT 1220... KLT 1500... KLT 1820...

KORALUX LINEAR COMFORT - M

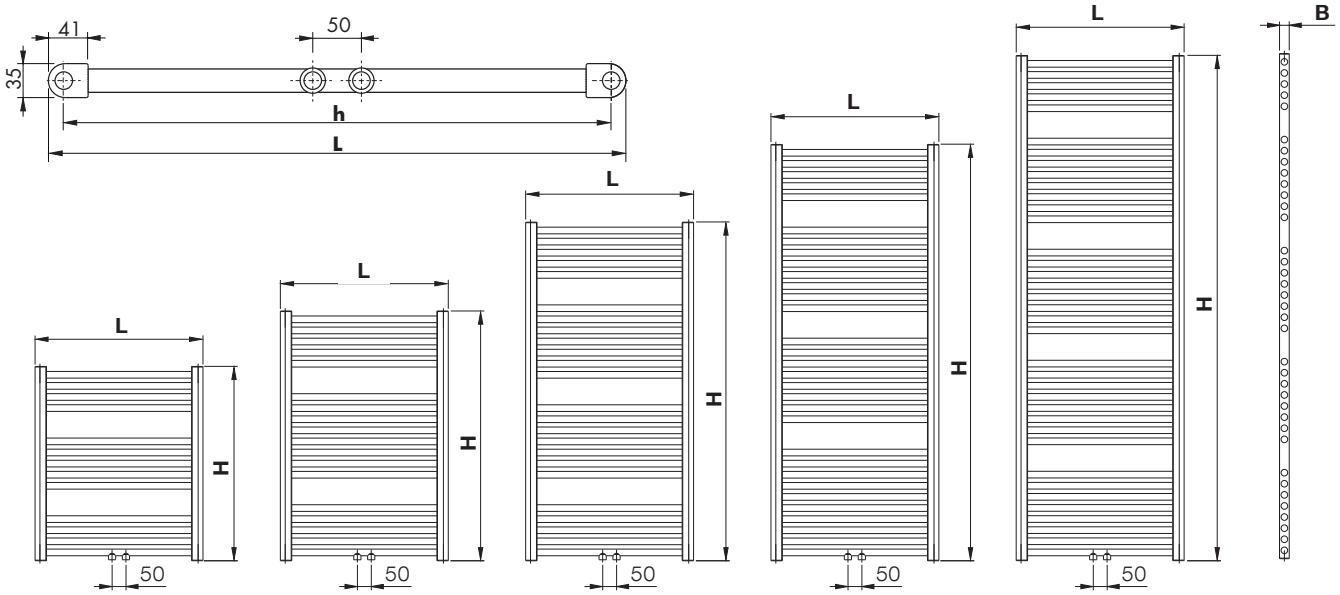

KLTM 700... KLTM 900... KLTM 1220... KLTM 1500... KLTM 1820...

KORALUX LINEAR COMFORT - E electric radiators

Model number	Electric input P [W]	M_c [kg]
KLTE 700.500	200	9,3
KLTE 700.600	200	10,4
KLTE 700.750	200	12,2
KLTE 900.450	200	11,5
KLTE 900.500	200	12,3
KLTE 900.600	300	13,9
KLTE 900.750	300	16,4
KLTE 1220.450	300	15,3
KLTE 1220.500	300	16,4
KLTE 1220.600	400	18,6

Model number	Electric input P [W]	M_c [kg]
KLTE 1220.750	500	21,9
KLTE 1500.450	400	19,2
KLTE 1500.500	400	20,6
KLTE 1500.600	500	23,5
KLTE 1500.750	600	27,9
KLTE 1820.450	400	23,0
KLTE 1820.500	500	24,7
KLTE 1820.600	600	28,2
KLTE 1820.750	700	33,4

M_c = total weight of the radiator including electric heating element and filler

KORALUX RONDO COMFORT, RONDO COMFORT - M

Technical Data

Height H	700, 900, 1220, 1500, 1820 mm
Length L	445, 495, 595, 745 mm
Depth B	59, 59, 66, 70 mm
Connecting pitch (KRT)	**h = L** - 30 mm
Connecting pitch (KRTM)	50 mm
Connecting thread (KRT)	4 x G 1/2 inside
Connecting thread (KRTM)	6 x G 1/2 inside
Highest allowed working pressure	10 bar
Test presure	13 bar
Maximum water temperature	110 °C
Flow coefficient (KRT)	A_T = 2,1 x 10^{-4} m^2
Flow coefficient (KRTM)	A_T = 9,3 x 10^{-5} m^2
Coefficient of resistance (KRT)	ξ_T = 1,8
Coefficient of resistance (KRTM)	ξ_T = 9,3

Fitting

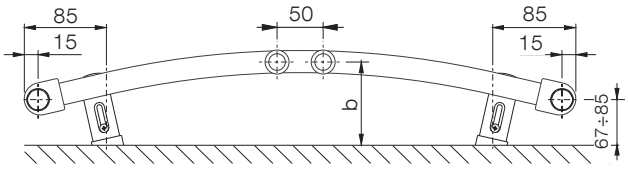

L [mm]	445	495	595	745
b [mm]	96 ÷ 114	96 ÷ 114	103 ÷ 121	104 ÷ 122

The mounting set is delivered as standard and consists of 4 special plastic brackets, screws, dowels and assembly instructions.

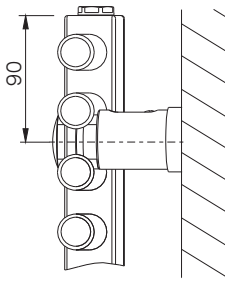

Design

KORALUX RONDO COMFORT (KRT) is a towel rail radiator with **bottom connection from the bottom down** with connecting pitch **h** derived from its length **L**. The design of the radiator also allows for **double sided connection from the top down**.

KORALUX RONDO COMFORT - M (KRTM) is a towel rail radiator modified for **bottom middle connection** with a connecting pitch of 50 mm.

Steel tubes	∅ 24 mm
Steel profile	41 x 35 mm

Type of Connection KORALUX RONDO COMFORT

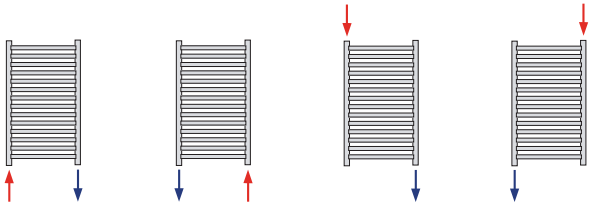

bottom connection

double - sided from the top down

Type of Connection KORALUX RONDO COMFORT - M

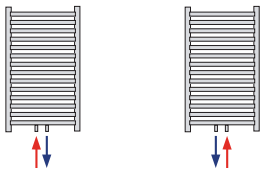

bottom middle*

*For radiators with the bottom middle connection you can use the integrated connection fittings HM delivered together with a thermostatic head (see page 39).

KORALUX RONDO COMFORT

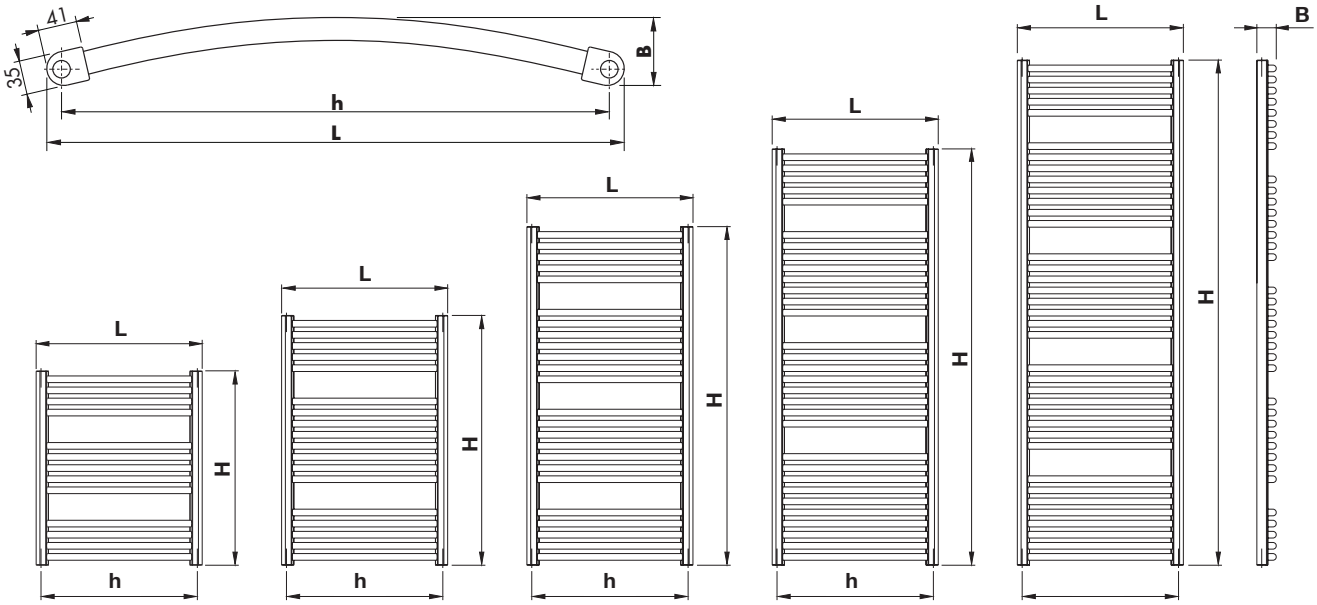

KRT 700... KRT 900... KRT 1220... KRT 1500... KRT 1820...

KORALUX RONDO COMFORT - M

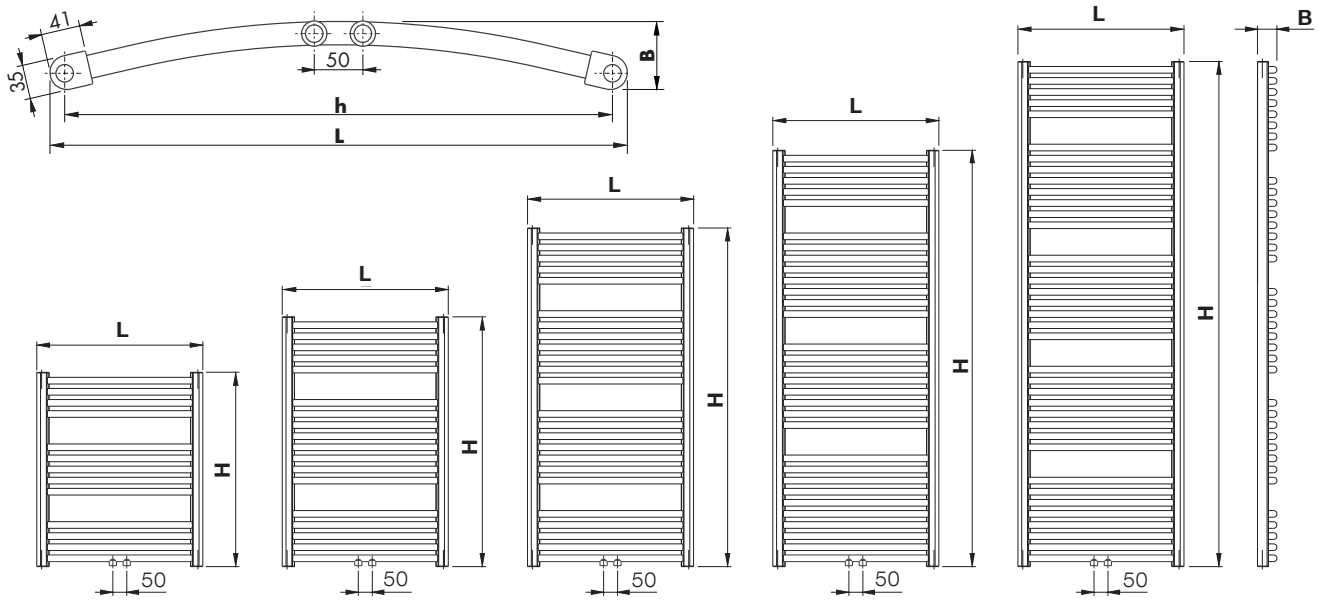

KRTM 700... KRTM 900... KRTM 1220... KRTM 1500... KRTM 1820...

KORALUX RONDO COMFORT - E electric radiators

Model number	Electric input P [W]	M_c [kg]
KRTE 700.500	200	9,3
KRTE 700.600	200	10,4
KRTE 700.750	200	12,2
KRTE 900.450	200	11,5
KRTE 900.500	200	12,3
KRTE 900.600	300	13,9
KRTE 900.750	300	16,4
KRTE 1220.450	300	15,3
KRTE 1220.500	300	16,4
KRTE 1220.600	400	18,6

Model number	Electric input P [W]	M_c [kg]
KRTE 1220.750	500	21,9
KRTE 1500.450	400	19,2
KRTE 1500.500	400	20,6
KRTE 1500.600	500	23,5
KRTE 1500.750	600	27,9
KRTE 1820.450	400	23,0
KRTE 1820.500	500	24,7
KRTE 1820.600	600	28,2
KRTE 1820.750	700	33,4

M_c = total weight of the radiator including electric heating element and filler

KORALUX LINEAR COMFORT, LINEAR COMFORT - M
KORALUX RONDO COMFORT, RONDO COMFORT - M

HEAT OUTPUT Q [W] FOR WATER AS A HEAT-CARRYING AGENT CERTIFIED TO EN 442

BASIC TECHNICAL PARAMETERS

Model number	H [mm]	L [mm]	h [mm]	t_1/t_2 [°C]	Q [W] for t_i[°C]					Nominal heat output Q [W] (75/65/20°C)	Temperature exponent n [-]	Radiator weight M_T [kg]	Water volume V_T [l]	Max. heat output E - element P [W]*
					15	18	20	22	24					
KLT (KLTM) 700.450 **KRT (KRTM) 700.450**	700	450 445	420 (50) 415 (50)	90/70	396	373	357	342	327	287	1,2452	5,0	3,4	-
				70/55	268	246	232	219	205					
				55/45	183	164	151	138	126					
KLT (KLTM) 700.500 **KRT (KRTM) 700.500**	700	500 495	470 (50) 465 (50)	90/70	434	409	392	376	359	315	1,2421	5,3	3,6	200
				70/55	294	270	255	240	225					
				55/45	201	180	166	152	138					
KLT (KLTM) 700.600 **KRT (KRTM) 700.600**	700	600 595	570 (50) 565 (50)	90/70	509	479	460	441	422	370	1,2358	6,1	4,1	200
				70/55	345	318	300	282	265					
				55/45	237	212	195	179	163					
KLT (KLTM) 700.750 **KRT (KRTM) 700.750**	700	750 745	720 (50) 715 (50)	90/70	617	582	559	535	512	450	1,2263	7,2	4,8	200
				70/55	420	387	365	344	323					
				55/45	289	259	239	219	200					
KLT (KLTM) 900.450 **KRT (KRTM) 900.450**	900	450 445	420 (50) 415 (50)	90/70	509	479	460	440	421	369	1,2489	6,6	4,5	200
				70/55	344	317	299	281	263					
				55/45	235	210	194	177	161					
KLT (KLTM) 900.500 **KRT (KRTM) 900.500**	900	500 495	470 (50) 465 (50)	90/70	558	526	505	483	462	405	1,2463	7,1	4,8	200
				70/55	378	348	328	308	289					
				55/45	259	231	213	195	177					
KLT (KLTM) 900.600 **KRT (KRTM) 900.600**	900	600 595	570 (50) 565 (50)	90/70	654	616	591	566	542	475	1,2412	8,2	5,5	300
				70/55	443	408	385	362	339					
				55/45	304	271	250	229	209					
KLT (KLTM) 900.750 **KRT (KRTM) 900.750**	900	750 745	720 (50) 715 (50)	90/70	796	750	720	690	660	579	1,2334	9,7	6,6	300
				70/55	540	498	470	442	415					
				55/45	371	332	306	281	256					
KLT (KLTM) 1220.450 **KRT (KRTM) 1220.450**	1220	450 445	420 (50) 415 (50)	90/70	696	656	629	602	576	504	1,2549	8,8	6,1	300
				70/55	470	432	407	383	359					
				55/45	321	286	263	241	219					
KLT (KLTM) 1220.500 **KRT (KRTM) 1220.500**	1220	500 495	470 (50) 465 (50)	90/70	764	719	690	660	631	553	1,2532	9,5	6,5	300
				70/55	515	474	447	420	394					
				55/45	352	314	289	265	241					
KLT (KLTM) 1220.600 **KRT (KRTM) 1220.600**	1220	600 595	570 (50) 565 (50)	90/70	897	845	810	776	742	650	1,2499	10,9	7,4	400
				70/55	606	558	526	494	463					
				55/45	414	370	341	312	284					
KLT (KLTM) 1220.750 **KRT (KRTM) 1220.750**	1220	750 745	720 (50) 715 (50)	90/70	1090	1027	985	944	902	791	1,2448	13,0	8,8	500
				70/55	737	679	640	602	565					
				55/45	505	451	416	381	346					
KLT (KLTM) 1500.450 **KRT (KRTM) 1500.450**	1500	450 445	420 (50) 415 (50)	90/70	866	815	782	748	715	626	1,2589	11,2	7,7	400
				70/55	583	536	506	475	445					
				55/45	398	355	327	299	272					
KLT (KLTM) 1500.500 **KRT (KRTM) 1500.500**	1500	500 495	470 (50) 465 (50)	90/70	950	894	857	821	785	687	1,2573	12,1	8,2	400
				70/55	640	589	555	522	489					
				55/45	437	390	359	328	298					
KLT (KLTM) 1500.600 **KRT (KRTM) 1500.600**	1500	600 595	570 (50) 565 (50)	90/70	1116	1051	1008	965	923	808	1,2543	13,8	9,4	500
				70/55	753	693	653	614	575					
				55/45	514	459	423	387	352					
KLT (KLTM) 1500.750 **KRT (KRTM) 1500.750**	1500	750 745	720 (50) 715 (50)	90/70	1358	1279	1227	1175	1123	984	1,2497	16,5	11,2	600
				70/55	917	844	796	748	701					
				55/45	627	560	516	472	430					
KLT (KLTM) 1820.450 **KRT (KRTM) 1820.450**	1820	450 445	420 (50) 415 (50)	90/70	1069	1006	965	923	883	772	1,2634	13,4	9,2	400
				70/55	719	661	623	585	548					
				55/45	490	437	402	368	334					
KLT (KLTM) 1820.500 **KRT (KRTM) 1820.500**	1820	500 495	470 (50) 465 (50)	90/70	1174	1105	1059	1014	969	848	1,2621	14,5	9,9	500
				70/55	790	726	685	643	602					
				55/45	538	480	442	404	367					
KLT (KLTM) 1820.600 **KRT (KRTM) 1820.600**	1820	600 595	570 (50) 565 (50)	90/70	1378	1297	1244	1191	1138	996	1,2594	16,6	11,3	600
				70/55	928	853	804	756	708					
				55/45	633	564	519	475	432					
KLT (KLTM) 1820.750 **KRT (KRTM) 1820.750**	1820	750 745	720 (50) 715 (50)	90/70	1676	1578	1513	1449	1385	1213	1,2553	19,8	13,4	700
				70/55	1130	1040	980	921	863					
				55/45	772	688	634	580	528					

* Stated maximum output values of the electric heating element apply for combined heating (see page 38)

Characteristic equation: $\Phi = K_T \bullet L^a \bullet H^b \bullet \Delta T^{(c_0+c_1.H)}$

K_T	a	b	c_0	c_1
$2{,}26531 \times 10^{-5}$	0,8842066	0,9284211	1,2280052	$2{,}37639 \times 10^{-5}$

The heat output stated are valid for bottom connection and central bottom connection.

KORALUX LINEAR COMFORT
KORALUX RONDO COMFORT

HEAT OUTPUT Q [W] FOR WATER AS A HEAT-CARRYING AGENT CERTIFIED TO EN 442

BASIC TECHNICAL PARAMETERS

Model number	H [mm]	L [mm]	h [mm]	t_1/t_2 [°C]	Q [W] for t_i[°C]					Nominal heat output Q [W] (75/65/20°C)	Temperature exponent n [-]	Radiator weight M_T [kg]	Water volume V_T [l]	Max. heat output E - element P [W]*
					15	18	20	22	24					
KLT 700.450	700	450	420	90/70	432	407	390	373	357	312	1,2638	5,0	3,4	-
KRT 700.450		445	415	70/55	291	267	252	237	222					
				55/45	198	176	162	149	135					
KLT 700.500	700	500	470	90/70	473	445	427	409	391	342	1,2543	5,3	3,6	200
KRT 700.500		495	465	70/55	319	293	276	260	243					
				55/45	218	194	179	164	149					
KLT 700.600	700	600	570	90/70	550	518	497	477	456	400	1,2354	6,1	4,1	200
KRT 700.600		595	565	70/55	373	344	324	305	286					
				55/45	256	229	211	194	176					
KLT 700.750	700	750	720	90/70	662	625	600	575	551	485	1,2069	7,2	4,8	200
KRT 700.750		745	715	70/55	453	418	395	372	350					
				55/45	314	281	260	239	218					
KLT 900.450	900	450	420	90/70	558	525	503	481	460	402	1,2699	6,6	4,5	200
KRT 900.450		445	415	70/55	374	344	324	304	285					
				55/45	254	227	209	191	173					
KLT 900.500	900	500	470	90/70	609	573	550	526	503	440	1,2621	7,1	4,8	200
KRT 900.500		495	465	70/55	410	377	355	334	313					
				55/45	279	249	229	210	191					
KLT 900.600	900	600	570	90/70	710	669	642	614	588	515	1,2463	8,2	5,5	300
KRT 900.600		595	565	70/55	480	442	417	392	367					
				55/45	329	294	270	248	225					
KLT 900.750	900	750	720	90/70	855	806	774	742	710	624	1,2227	9,7	6,6	300
KRT 900.750		745	715	70/55	582	537	507	477	448					
				55/45	402	359	332	304	277					
KLT 1220.450	1220	450	420	90/70	764	718	688	658	629	549	1,2797	8,8	6,1	300
KRT 1220.450		445	415	70/55	511	469	442	415	388					
				55/45	346	308	283	259	235					
KLT 1220.500	1220	500	470	90/70	835	785	752	720	688	601	1,2744	9,5	6,5	300
KRT 1220.500		495	465	70/55	559	514	484	455	426					
				55/45	380	338	311	284	258					
KLT 1220.600	1220	600	570	90/70	974	916	878	841	804	703	1,2638	10,9	7,4	400
KRT 1220.600		595	565	70/55	655	602	567	533	499					
				55/45	446	397	366	335	304					
KLT 1220.750	1220	750	720	90/70	1175	1107	1062	1017	972	852	1,2479	13,0	8,8	500
KRT 1220.750		745	715	70/55	794	731	689	648	608					
				55/45	544	485	447	409	372					
KLT 1500.450	1500	450	420	90/70	951	894	856	819	782	682	1,2883	11,2	7,7	400
KRT 1500.450		445	415	70/55	634	582	548	514	481					
				55/45	429	381	350	320	290					
KLT 1500.500	1500	500	470	90/70	1040	978	937	896	856	747	1,2853	12,1	8,2	400
KRT 1500.500		495	465	70/55	695	638	601	564	527					
				55/45	470	418	384	351	319					
KLT 1500.600	1500	600	570	90/70	1215	1143	1095	1048	1001	874	1,2792	13,8	9,4	500
KRT 1500.600		595	565	70/55	813	747	703	660	618					
				55/45	551	491	451	412	374					
KLT 1500.750	1500	750	720	90/70	1470	1383	1326	1269	1213	1060	1,2700	16,5	11,2	600
KRT 1500.750		745	715	70/55	987	907	854	803	751					
				55/45	671	598	550	503	457					
KLT 1820.450	1820	450	420	90/70	1175	1104	1057	1011	965	841	1,2981	13,4	9,2	400
KRT 1820.450		445	415	70/55	782	717	675	633	592					
				55/45	527	468	430	392	356					
KLT 1820.500	1820	500	470	90/70	1287	1209	1158	1107	1057	921	1,2976	14,5	9,9	500
KRT 1820.500		495	465	70/55	856	785	739	693	648					
				55/45	577	513	471	430	390					
KLT 1820.600	1820	600	570	90/70	1506	1415	1355	1295	1237	1078	1,2967	16,6	11,3	600
KRT 1820.600		595	565	70/55	1002	919	865	812	759					
				55/45	676	601	552	503	456					
KLT 1820.750	1820	750	720	90/70	1825	1715	1642	1570	1499	1307	1,2953	19,8	13,4	700
KRL 1820.750		745	715	70/55	1215	1115	1049	984	920					
				55/45	820	729	669	611	554					

* Stated maximum output values of the electric heating element apply for combined heating (see page 38)

Characteristic equation: $\Phi = K_T \bullet L^a \bullet H^b \bullet \Delta T^{(c_0+c_1 \cdot H)}$	K_T	a	b	c_0	c_1
	$2{,}88645 \times 10^{-5}$	0,8625333	0,9234257	1,2296735	$2{,}46711 \times 10^{-5}$

The heat output stated are valid for diagonal double side connection.

KORALUX LINEAR CLASSIC, LINEAR CLASSIC - M

Technical Data

Height H	700, 900, 1220, 1500, 1820 mm
Length L	450, 500, 600, 750 mm
Depth B	30 mm
Connecting pitch (KLC)	**h = L** - 30 mm
Connecting pitch (KLCM)	50 mm
Connecting thread (KLC)	4 x G 1/2 inside
Connecting thread (KLCM)	6 x G 1/2 inside
Highest allowed working pressure	10 bar
Test presure	13 bar
Maximum water temperature	110 °C
Flow coefficient (KLC)	A_T = 2,1 x 10^{-4} m^2
Flow coefficient (KLCM)	A_T = 7,1 x 10^{-5} m^2
Coefficient of resistance (KLC)	ξ_T = 1,8
Coefficient of resistance (KLCM)	ξ_T = 16,0

Design

KORALUX LINEAR CLASSIC (KLC) is a towel rail radiator with **bottom connection from the bottom down** with connecting pitch **h** derived from its length **L**. The design of the radiator also allows for **double sided connection from the top down**.

KORALUX LINEAR CLASSIC - M (KLCM) is a towel rail radiator modified for **bottom middle connection** with a connecting pitch of 50 mm.

Steel tubes	∅ 20 mm
Steel profile	40 x 30 mm

Fitting

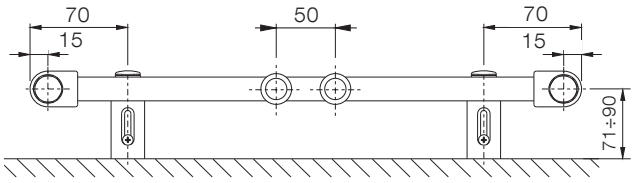

The mounting set is delivered as standard and consists of 4 special plastic brackets, screws, dowels and assembly instructions.

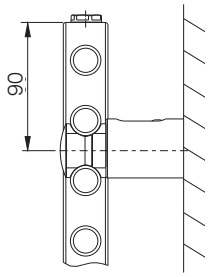

Type of Connection KORALUX LINEAR CLASSIC

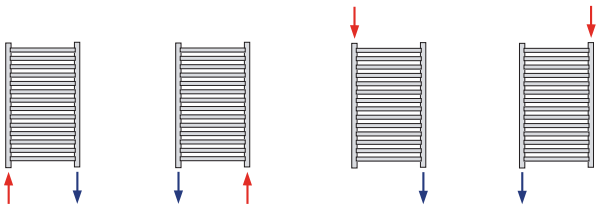

bottom connection

double - sided from the top down

Type of Connection KORALUX LINEAR CLASSIC - M

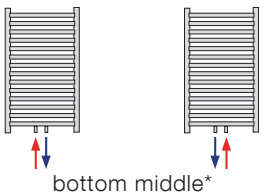

bottom middle*

*For radiators with the bottom middle connection you can use the integrated connection fittings HM delivered together with a thermostatic head (see page 39).

KORALUX LINEAR CLASSIC

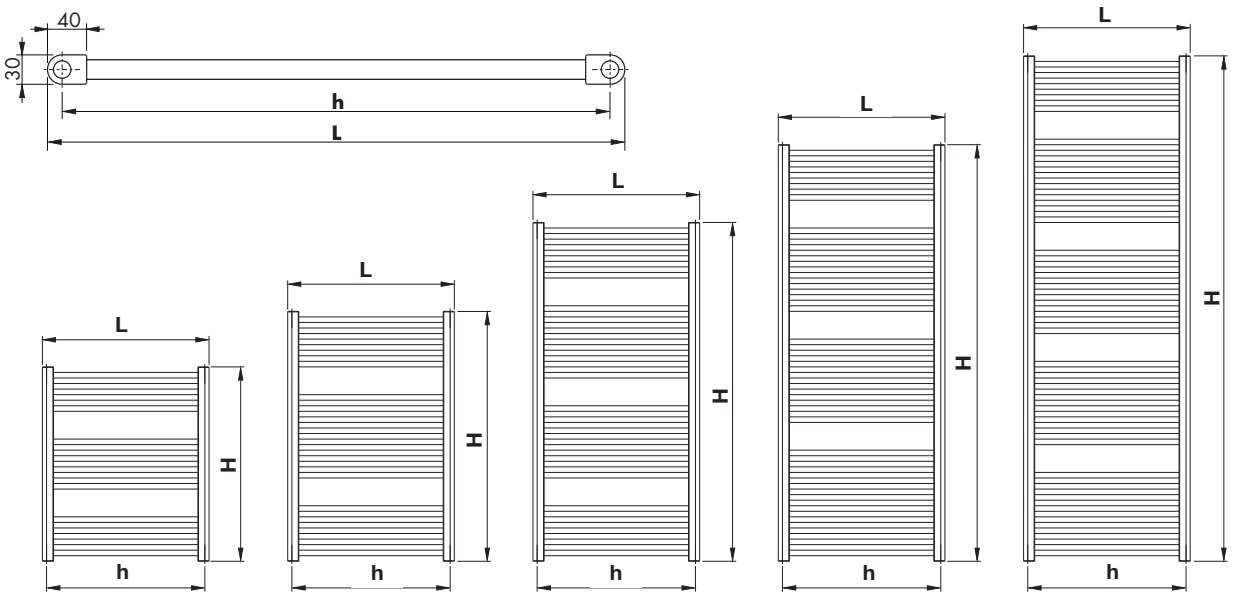

KLC 700... KLC 900... KLC 1220... KLC 1500... KLC 1820...

KORALUX LINEAR CLASSIC - M

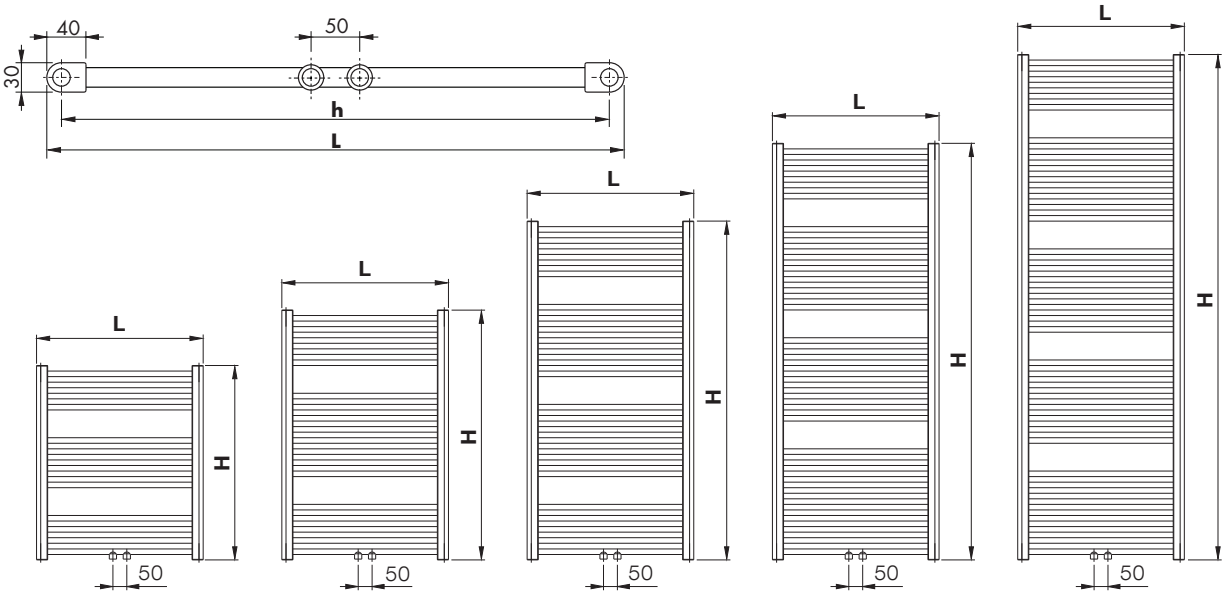

KLCM 700... KLCM 900... KLCM 1220... KLCM 1500... KLCM 1820...

KORALUX LINEAR CLASSIC - E electric radiators

Model number	Electric input P [W]	M_c [kg]
KLCE 700.600	200	8,7
KLCE 700.750	200	10,1
KLCE 900.450	200	9,6
KLCE 900.500	200	10,2
KLCE 900.600	200	11,5
KLCE 900.750	300	13,4
KLCE 1220.450	300	12,8
KLCE 1220.500	300	13,5
KLCE 1220.600	300	15,3

Model number	Electric input P [W]	M_c [kg]
KLCE 1220.750	400	17,9
KLCE 1500.450	300	16,0
KLCE 1500.500	400	17,0
KLCE 1500.600	400	19,3
KLCE 1500.750	500	22,7
KLCE 1820.450	400	19,1
KLCE 1820.500	500	20,4
KLCE 1820.600	500	23,1
KLCE 1820.750	700	27,2

M_c = total weight of the radiator including electric heating element and filler

KORALUX RONDO CLASSIC, RONDO CLASSIC - M

Technical Data

Height H	700, 900, 1220, 1500, 1820 mm
Length L	445, 495, 595, 745 mm
Depth B	54, 55, 61, 65 mm
Connecting pitch (KRC)	**h = L - 30 mm**
Connecting pitch (KRCM)	50 mm
Connecting thread (KRC)	4 x G 1/2 inside
Connecting thread (KRCM)	6 x G 1/2 inside
Highest allowed working pressure	10 bar
Test presure	13 bar
Maximum water temperature	110 °C
Flow coefficient (KRC)	A_T = 2,1 x 10^{-4} m^2
Flow coefficient (KRCM)	A_T = 7,1 x 10^{-5} m^2
Coefficient of resistance (KRC)	ξ_T = 1,8
Coefficient of resistance (KRCM)	ξ_T = 16,0

Fitting

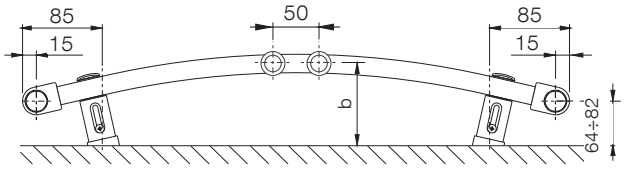

L [mm]	445	495	595	745
b [mm]	93 ÷ 111	94 ÷ 112	100 ÷ 118	104 ÷ 122

The mounting set is delivered as standard and consists of 4 special plastic brackets, screws, dowels and assembly instructions.

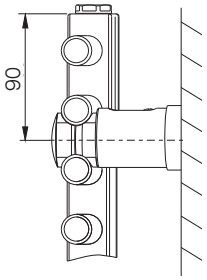

Design

KORALUX RONDO CLASSIC (KRC) is a towel rail radiator with **bottom connection from the bottom down** with connecting pitch **h** derived from its length **L**. The design of the radiator also allows for **double sided connection from the top down**.

KORALUX RONDO CLASSIC - M (KRCM) is a towel rail radiator modified for **bottom middle connection** with a connecting pitch of 50 mm.

Steel tubes	∅ 20 mm
Steel profile	40 x 30 mm

Type of Connection KORALUX RONDO CLASSIC

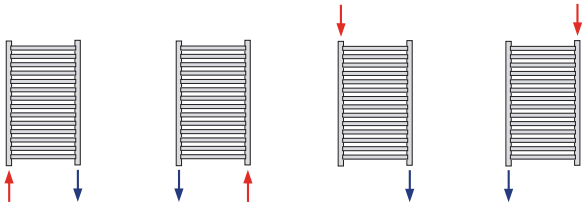

bottom connection

double - sided from the top down

Type of Connection KORALUX RONDO CLASSIC - M

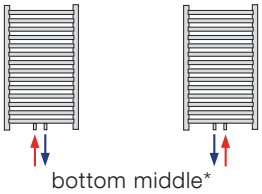

bottom middle*

*For radiators with the bottom middle connection you can use the integrated connection fittings HM delivered together with a thermostatic head (see page 39).

KORALUX RONDO CLASSIC

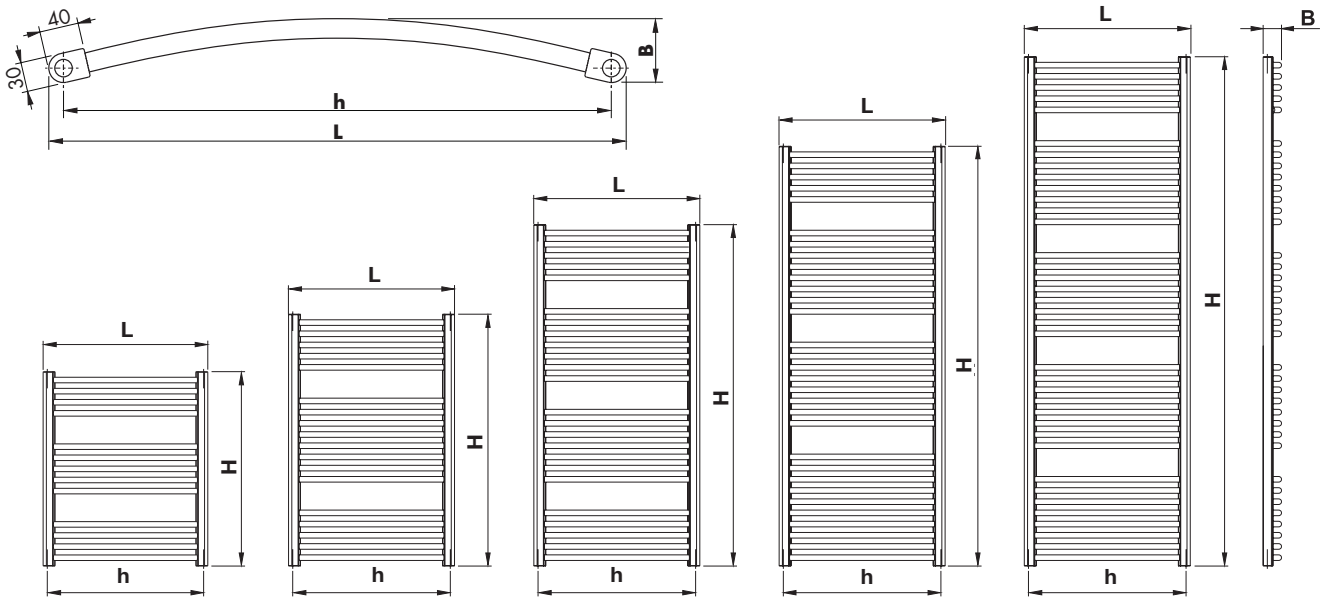

KRC 700... KRC 900... KRC 1220... KRC 1500... KRC 1820...

KORALUX RONDO CLASSIC - M

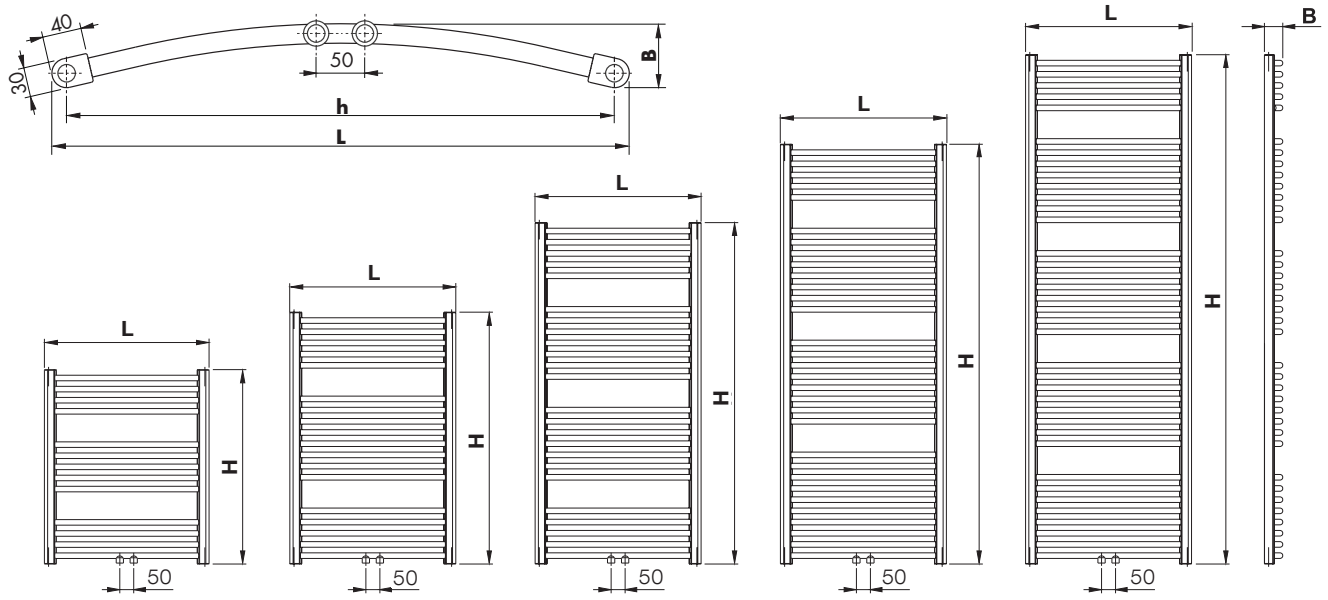

KRCM 700... KRCM 900... KRCM 1220... KRCM 1500... KRCM 1820...

KORALUX RONDO CLASSIC- E electric radiators

Model number	Electric input P [W]	M_c [kg]
KRCE 700.600	200	8,7
KRCE 700.750	200	10,1
KRCE 900.450	200	9,6
KRCE 900.500	200	10,2
KRCE 900.600	200	11,5
KRCE 900.750	300	13,4
KRCE 1220.450	300	12,8
KRCE 1220.500	300	13,5
KRCE 1220.600	300	15,3

Model number	Electric input P [W]	M_c [kg]
KRCE 1220.750	400	17,9
KRCE 1500.450	300	16,0
KRCE 1500.500	400	17,0
KRCE 1500.600	400	19,3
KRCE 1500.750	500	22,7
KRCE 1820.450	400	19,1
KRCE 1820.500	500	20,4
KRCE 1820.600	500	23,1
KRCE 1820.750	700	27,2

M_c = total weight of the radiator including electric heating element and filler

KORALUX LINEAR CLASSIC, LINEAR CLASSIC - M
KORALUX RONDO CLASSIC, RONDO CLASSIC - M

HEAT OUTPUT Q [W] FOR WATER AS A HEAT-CARRYING AGENT CERTIFIED TO EN 442

BASIC TECHNICAL PARAMETERS

Model number	H [mm]	L [mm]	h [mm]	t_1/t_2 [°C]	Q [W] for t_i[°C]					Nominal heat output Q [W] (75/65/20°C)	Temperature exponent n [-]	Radiator weight M_T [kg]	Water volume V_T [l]	Max. heat output E - element P [W]*
					15	18	20	22	24					
KLC (KLCM) 700.450 **KRC (KRCM) 700.450**	700	450 445	420 (50) 415 (50)	90/70 70/55 55/45	367 249 171	346 230 153	332 217 141	318 204 130	304 191 118	267	1,2309	4,4	2,5	-
KLC (KLCM) 700.500 **KRC (KRCM) 700.500**	700	500 495	470 (50) 495 (50)	90/70 70/55 55/45	401 272 188	378 251 168	363 237 155	348 223 142	333 209 129	292	1,2293	4,7	2,7	-
KLC (KLCM) 700.600 **KRC (KRCM) 700.600**	700	600 595	570 (50) 565 (50)	90/70 70/55 55/45	468 318 219	441 293 196	423 277 181	406 261 166	388 245 151	341	1,2260	5,4	3,0	200
KLC (KLCM) 700.750 **KRC (KRCM) 700.750**	700	750 745	720 (50) 715 (50)	90/70 70/55 55/45	564 385 265	532 355 237	511 335 219	490 315 201	469 296 183	412	1,2211	6,3	3,5	200
KLC (KLCM) 900.450 **KRC (KRCM) 900.450**	900	450 445	420 (50) 415 (50)	90/70 70/55 55/45	479 325 223	451 299 199	433 282 183	415 265 168	397 249 153	348	1,2392	5,9	3,4	200
KLC (KLCM) 900.500 **KRC (KRCM) 900.500**	900	500 495	470 (50) 465 (50)	90/70 70/55 55/45	523 354 243	493 326 217	473 308 200	453 290 184	433 272 167	380	1,2374	6,3	3,6	200
KLC (KLCM) 900.600 **KRC (KRCM) 900.600**	900	600 595	570 (50) 565 (50)	90/70 70/55 55/45	609 413 284	574 381 254	551 359 234	528 338 215	505 317 195	443	1,2340	7,2	4,0	200
KLC (KLCM) 900.750 **KRC (KRCM) 900.750**	900	750 745	720 (50) 715 (50)	90/70 70/55 55/45	734 499 344	692 460 307	664 434 283	637 409 260	609 384 237	535	1,2288	8,5	4,7	300
KLC (KLCM) 1220.450 **KRC (KRCM) 1220.450**	1220	450 445	420 (50) 415 (50)	90/70 70/55 55/45	661 446 305	623 411 272	597 387 251	572 364 230	547 341 209	479	1,2524	7,9	4,5	300
KLC (KLCM) 1220.500 **KRC (KRCM) 1220.500**	1220	500 495	470 (50) 465 (50)	90/70 70/55 55/45	722 487 333	680 449 297	652 423 274	624 398 251	597 373 228	523	1,2505	8,4	4,8	300
KLC (KLCM) 1220.600 **KRC (KRCM) 1220.600**	1220	600 595	570 (50) 565 (50)	90/70 70/55 55/45	843 570 390	794 524 348	761 494 321	729 465 294	697 436 267	611	1,2468	9,6	5,4	300
KLC (KLCM) 1220.750 **KRC (KRCM) 1220.750**	1220	750 745	720 (50) 715 (50)	90/70 70/55 55/45	1015 687 471	956 633 421	917 597 388	879 562 356	841 527 324	737	1,2412	11,3	6,3	400
KLC (KLCM) 1500.450 **KRC (KRCM) 1500.450**	1500	450 445	420 (50) 415 (50)	90/70 70/55 55/45	824 556 380	776 512 339	744 483 313	713 454 286	682 425 260	597	1,2514	9,9	5,7	300
KLC (KLCM) 1500.500 **KRC (KRCM) 1500.500**	1500	500 495	470 (50) 465 (50)	90/70 70/55 55/45	900 608 416	847 559 371	813 527 342	778 496 313	744 465 285	652	1,2501	10,6	6,1	400
KLC (KLCM) 1500.600 **KRC (KRCM) 1500.600**	1500	600 595	570 (50) 565 (50)	90/70 70/55 55/45	1050 709 486	989 653 433	948 616 399	908 579 366	868 543 333	761	1,2474	12,1	6,9	400
KLC (KLCM) 1500.750 **KRC (KRCM) 1500.750**	1500	750 745	720 (50) 715 (50)	90/70 70/55 55/45	1266 857 587	1193 789 524	1144 744 483	1096 700 443	1048 656 403	919	1,2433	14,3	8,0	500
KLC (KLCM) 1820.450 **KRC (KRCM) 1820.450**	1820	450 445	420 (50) 415 (50)	90/70 70/55 55/45	1014 685 468	955 630 418	916 594 385	877 559 353	839 524 321	735	1,2503	11,9	6,8	400
KLC (KLCM) 1820.500 **KRC (KRCM) 1820.500**	1820	500 495	470 (50) 465 (50)	90/70 70/55 55/45	1108 748 512	1044 689 457	1001 650 421	959 611 385	917 572 351	803	1,2496	12,8	7,3	500
KLC (KLCM) 1820.600 **KRC (KRCM) 1820.600**	1820	600 595	570 (50) 565 (50)	90/70 70/55 55/45	1293 873 598	1217 804 534	1168 758 492	1118 713 450	1069 668 410	937	1,2481	14,5	8,2	500
KLC (KLCM) 1820.750 **KRC (KRCM) 1820.750**	1820	750 745	720 (50) 715 (50)	90/70 70/55 55/45	1559 1054 722	1469 971 645	1409 915 594	1349 861 544	1290 807 495	1131	1,2458	17,2	9,7	700

* Stated maximum output values of the electric heating element apply for combined heating (see page 38)

Characteristic equation: $\Phi = K_T \bullet L^a \bullet H^b \bullet \Delta T^{(c_0+c_1 \cdot H)}$

K_T	a	b	c_0	c_1
$1{,}60403 \times 10^{-5}$	0,8452976	1,0126953	1,2279575	$9{,}83047 \times 10^{-6}$

Stated heat output values apply for the illustrated types of radiator connections:

KLC, KRC

bottom connection

KLCM, KRCM

bottom middle

KORALUX LINEAR CLASSIC
KORALUX RONDO CLASSIC

HEAT OUTPUT Q [W] FOR WATER AS A HEAT-CARRYING AGENT CERTIFIED TO EN 442

BASIC TECHNICAL PARAMETERS

Model number	H [mm]	L [mm]	h [mm]	t_1/t_2 [°C]	Q [W] for t_1[°C]					Nominal heat output Q [W] (75/65/20°C)	Temperature exponent n [-]	Radiator weight M_T [kg]	Water volume V_T [l]	Max. heat output E - element P [W]*
					15	18	20	22	24					
KLC 700.450 **KRC 700.450**	700	450 445	420 415	90/70 70/55 55/45	404 271 184	380 249 164	364 234 150	349 220 138	333 206 125	291	1,2765	4,4	2,5	-
KLC 700.500 **KRC 700.500**	700	500 495	470 465	90/70 70/55 55/45	441 296 202	415 272 180	397 257 165	380 241 151	364 226 137	318	1,2655	4,7	2,7	-
KLC 700.600 **KRC 700.600**	700	600 595	570 565	90/70 70/55 55/45	513 347 238	483 319 212	463 301 196	444 283 179	424 266 163	372	1,2435	5,4	3,0	200
KLC 700.750 **KRC 700.750**	700	750 745	720 715	90/70 70/55 55/45	613 419 290	579 387 260	556 366 240	533 344 221	510 323 201	449	1,2105	6,3	3,5	200
KLC 900.450 **KRC 900.450**	900	450 445	420 415	90/70 70/55 55/45	526 352 239	494 323 212	474 304 195	453 286 178	433 267 162	378	1,2783	5,9	3,4	200
KLC 900.500 **KRC 900.500**	900	500 495	470 465	90/70 70/55 55/45	573 384 261	539 353 233	517 333 214	494 313 196	472 293 178	413	1,2691	6,3	3,6	200
KLC 900.600 **KRC 900.600**	900	600 595	570 565	90/70 70/55 55/45	665 449 307	627 413 274	601 390 253	575 367 231	550 343 210	482	1,2509	7,2	4,0	200
KLC 900.750 **KRC 900.750**	900	750 745	720 715	90/70 70/55 55/45	799 544 375	754 502 336	723 474 310	693 446 284	664 419 259	583	1,2235	8,5	4,7	300
KLC 1220.450 **KRC 1220.450**	1220	450 445	420 415	90/70 70/55 55/45	722 483 327	679 443 291	651 418 268	622 392 245	594 367 222	519	1,2811	7,9	4,5	300
KLC 1220.500 **KRC 1220.500**	1220	500 495	470 465	90/70 70/55 55/45	788 528 358	741 485 319	710 457 293	679 429 268	649 401 243	567	1,2749	8,4	4,8	300
KLC 1220.600 **KRC 1220.600**	1220	600 595	570 565	90/70 70/55 55/45	917 617 420	863 567 374	827 534 345	792 502 315	757 470 287	662	1,2627	9,6	5,4	300
KLC 1220.750 **KRC 1220.750**	1220	750 745	720 715	90/70 70/55 55/45	1101 745 510	1037 686 456	995 647 420	953 608 385	912 570 350	799	1,2442	11,3	6,3	400
KLC 1500.450 **KRC 1500.450**	1500	450 445	420 415	90/70 70/55 55/45	895 598 405	842 549 360	806 517 331	771 485 303	737 454 275	643	1,2836	9,9	5,7	300
KLC 1500.500 **KRC 1500.500**	1500	500 495	470 465	90/70 70/55 55/45	978 654 443	919 601 395	881 566 363	843 531 332	805 497 301	703	1,2800	10,6	6,1	400
KLC 1500.600 **KRC 1500.600**	1500	600 595	570 565	90/70 70/55 55/45	1138 763 518	1071 701 462	1026 661 425	982 621 388	938 581 353	820	1,2730	12,1	6,9	400
KLC 1500.750 **KRC 1500.750**	1500	750 745	720 715	90/70 70/55 55/45	1372 923 629	1291 849 561	1238 800 516	1185 752 472	1133 704 429	991	1,2624	14,3	8,0	500
KLC 1820.450 **KRC 1820.450**	1820	450 445	420 415	90/70 70/55 55/45	1095 731 495	1029 671 440	986 632 404	943 593 369	901 555 335	786	1,2864	11,9	6,8	400
KLC 1820.500 **KRC 1820.500**	1820	500 495	470 465	90/70 70/55 55/45	1197 799 541	1125 734 481	1078 691 442	1031 648 404	984 606 366	859	1,2859	12,8	7,3	500
KLC 1820.600 **KRC 1820.600**	1820	600 595	570 565	90/70 70/55 55/45	1397 933 631	1313 857 562	1258 807 516	1203 757 472	1149 708 428	1003	1,2848	14,5	8,2	500
KLC 1820.750 **KRC 1820.750**	1820	750 745	720 715	90/70 70/55 55/45	1686 1127 763	1585 1034 679	1518 974 624	1453 914 570	1387 855 517	1211	1,2831	17,2	9,7	700

* Stated maximum output values of the electric heating element apply for combined heating (see page 38)

Characteristic equation: $\Phi = K_T \bullet L^a \bullet H^b \bullet \Delta T^{(c_0+c_1 \cdot H)}$	K_T	a	b	c_0	c_1
	$1{,}33063 \times 10^{-5}$	0,8465104	1,0389605	1,2584421	$1{,}02361 \times 10^{-7}$

Stated heat output values apply for the illustrated types of radiator connections:

KLC, KRC

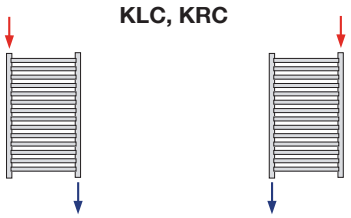

double - sided from the top down

KORALUX STANDARD

Technical Data

Height H	700, 900, 1220, 1500 mm
Length L	400, 500, 600 mm
Depth B	30 mm
Connecting pitch	**h = L** - 30 mm
Connecting thread	4 x G 1/2 inside
Highest allowed working pressure	10 bar
Test presure	13 bar
Maximum water temperature	110 °C
Flow coefficient	A_T =1,6 x 10^{-4} m^2
Coefficient of resistance	ξ_T = 3,1

Fitting

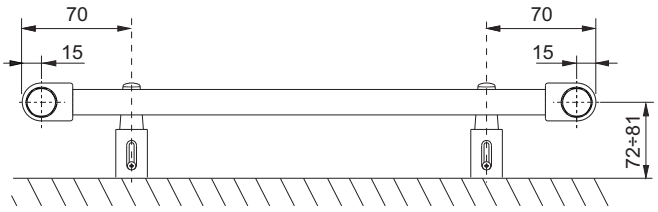

Design

KORALUX STANDARD (KS) is a towel rail radiator with **bottom connection from the bottom down** with connecting pitch **h** derived from its length **L**. The design of the radiator also allows for **double sided connection from the top down**.

Steel tubes ∅ 20 mm
Steel profile 40 x 30 mm

The mounting set is delivered as standard and consists of 4 special plastic brackets, screws, dowels and assembly instructions.

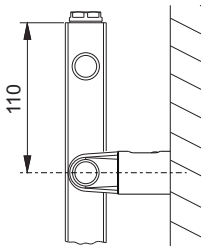

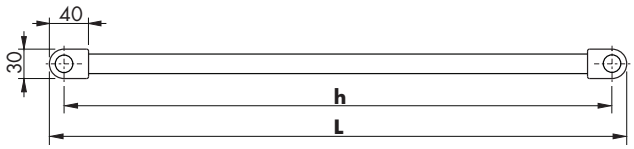

Type of Connection KORALUX STANDARD

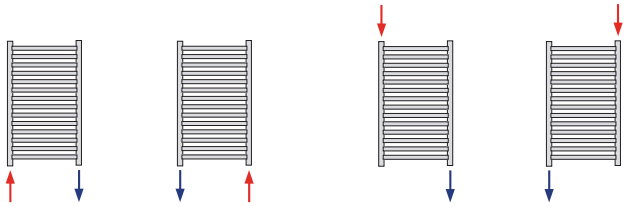

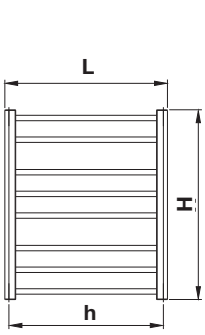

KS 700...

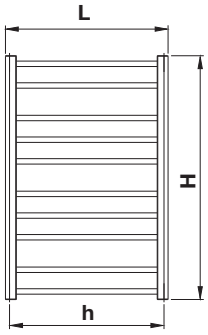

KS 900...

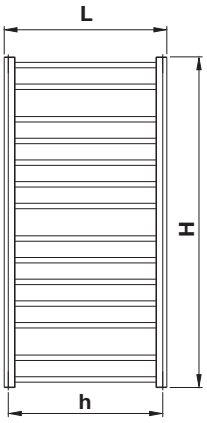

KS 1220...

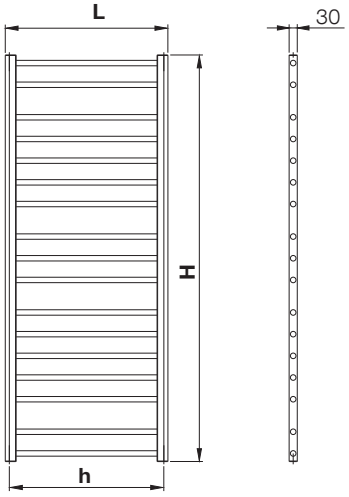

KS 1500...

HEAT OUTPUT Q [W] FOR WATER AS A HEAT-CARRYING AGENT CERTIFIED TO EN 442

BASIC TECHNICAL PARAMETERS

Model number	H [mm]	L [mm]	h [mm]	t_1/t_2 [°C]	Q [W] for t_i[°C]					Nominal heat output Q [W] (75/65/20°C)	Temperature exponent n [-]	Radiator weight M_T [kg]	Water volume V_T [l]
					15	18	20	22	24				
KS 700.400	700	400	370	90/70	272	257	246	236	226	198	1,2347	3,3	1,9
				75/65	223	208	198	188	178				
				70/55	185	170	161	151	142				
				55/45	127	113	105	96	87				
KS 700.500	700	500	470	90/70	317	299	287	275	263	231	1,2278	3,7	2,1
				75/65	260	242	231	220	208				
				70/55	216	199	188	177	166				
				55/45	148	133	122	112	102				
KS 700.600	700	600	570	90/70	360	340	326	313	299	263	1,2209	4,1	2,3
				75/65	296	276	263	250	237				
				70/55	246	226	214	201	189				
				55/45	169	152	140	128	117				
KS 900.400	900	400	370	90/70	347	328	315	302	289	254	1,2153	4,2	2,5
				75/65	285	266	254	242	229				
				70/55	237	219	207	195	183				
				55/45	164	147	136	124	113				
KS 900.500	900	500	470	90/70	407	384	368	353	338	297	1,2219	4,7	2,7
				75/65	334	312	297	282	268				
				70/55	277	256	241	227	213				
				55/45	191	171	158	145	132				
KS 900.600	900	600	570	90/70	463	436	418	401	384	337	1,2285	5,2	3,0
				75/65	379	354	337	320	304				
				70/55	314	290	274	258	242				
				55/45	216	194	179	164	149				
KS 1220.400	1220	400	370	90/70	473	446	428	411	393	345	1,2274	5,7	3,4
				75/65	388	362	345	328	311				
				70/55	322	297	280	264	247				
				55/45	222	198	183	168	153				
KS 1220.500	1220	500	470	90/70	554	522	501	480	459	403	1,2341	6,4	3,7
				75/65	454	423	403	383	363				
				70/55	376	346	327	308	288				
				55/45	258	231	213	195	178				
KS 1220.600	1220	600	570	90/70	631	594	570	546	522	458	1,2407	7,1	4,1
				75/65	516	481	458	435	413				
				70/55	427	393	371	349	327				
				55/45	293	262	241	221	201				
KS 1500.400	1500	400	370	90/70	588	554	532	509	487	427	1,2423	7,0	4,1
				75/65	481	448	427	406	385				
				70/55	398	367	346	325	305				
				55/45	273	244	225	206	187				
KS 1500.500	1500	500	470	90/70	688	648	622	595	569	499	1,2456	7,8	4,6
				75/65	562	524	499	474	449				
				70/55	465	428	404	380	356				
				55/45	319	284	262	240	218				
KS 1500.600	1500	600	570	90/70	782	737	707	677	647	567	1,2489	8,6	5,0
				75/65	639	596	567	539	511				
				70/55	528	486	459	431	404				
				55/45	362	323	297	272	248				

Characteristic equation: $\Phi = K_T \bullet L^a \bullet H^b \bullet \Delta T^{(c_0+c_1.H)}$

K_T	a	b	c_0	c_1
$6{,}09652 \times 10^{-5}$	0,6969140	0,9191200	1,2108153	$2{,}19842 \times 10^{-5}$

Stated heat output values apply for the illustrated types of radiator connections:

KS

bottom connection

KORALUX STANDARD

HEAT OUTPUT Q [W] FOR WATER AS A HEAT-CARRYING AGENT CERTIFIED TO EN 442

BASIC TECHNICAL PARAMETERS

Model number	H [mm]	L [mm]	h [mm]	t_1/t_2 [°C]	Q [W] for t_i[°C]					Nominal heat output Q [W] (75/65/20°C)	Temperature exponent n [-]	Radiator weight M_T [kg]	Water volume V_T [l]
					15	18	20	22	24				
KS 700.400	700	400	370	90/70	295	278	266	255	244	213	1,2674	3,3	1,9
				75/65	241	224	213	202	191				
				70/55	198	182	172	161	151				
				55/45	135	120	111	101	92				
KS 700.500	700	500	470	90/70	345	324	311	298	285	249	1,2616	3,7	2,1
				75/65	281	262	249	236	224				
				70/55	232	213	201	189	177				
				55/45	158	141	130	119	108				
KS 700.600	700	600	570	90/70	391	368	353	338	323	283	1,2557	4,1	2,3
				75/65	319	297	283	269	255				
				70/55	264	243	229	215	201				
				55/45	180	161	148	135	123				
KS 900.400	900	400	370	90/70	378	356	342	328	313	275	1,2365	4,2	2,5
				75/65	310	289	275	261	248				
				70/55	256	236	223	210	197				
				55/45	176	157	145	133	121				
KS 900.500	900	500	470	90/70	444	418	401	384	367	322	1,2432	4,7	2,7
				75/65	363	338	322	306	290				
				70/55	300	276	261	245	230				
				55/45	206	184	169	155	141				
KS 900.600	900	600	570	90/70	504	474	455	436	417	365	1,2499	5,2	3,0
				75/65	411	383	365	347	329				
				70/55	340	313	295	278	260				
				55/45	233	208	191	175	159				
KS 1220.400	1220	400	370	90/70	512	482	463	444	425	373	1,2274	5,7	3,4
				75/65	420	392	373	355	336				
				70/55	348	321	303	285	267				
				55/45	240	214	198	181	165				
KS 1220.500	1220	500	470	90/70	599	565	542	519	497	436	1,2341	6,4	3,7
				75/65	491	458	436	414	393				
				70/55	407	375	354	333	312				
				55/45	280	250	230	211	192				
KS 1220.600	1220	600	570	90/70	683	643	617	591	566	496	1,2407	7,1	4,1
				75/65	559	521	496	471	447				
				70/55	463	426	402	378	354				
				55/45	317	283	261	239	218				
KS 1500.400	1500	400	370	90/70	634	597	572	548	524	458	1,2640	7,0	4,1
				75/65	517	481	458	435	412				
				70/55	427	392	370	347	325				
				55/45	290	259	238	218	198				
KS 1500.500	1500	500	470	90/70	741	698	669	641	612	536	1,2568	7,8	4,6
				75/65	605	563	536	509	482				
				70/55	499	459	433	407	381				
				55/45	341	304	280	256	233				
KS 1500.600	1500	600	570	90/70	841	792	760	727	695	609	1,2532	8,6	5,0
				75/65	687	640	609	578	548				
				70/55	567	522	492	463	434				
				55/45	388	346	319	292	265				

Characteristic equation: $\Phi = K_T \bullet L^a \bullet H^b \bullet \Delta T^{(c_0+c_1 \cdot H)}$	K_T	a	b	c_0	c_1
	$2{,}60605 \times 10^{-5}$	0,6991236	1,0406641	1,2617516	$-8{,}966688 \times 10^{-6}$

Stated heat output values apply for the illustrated types of radiator connections:

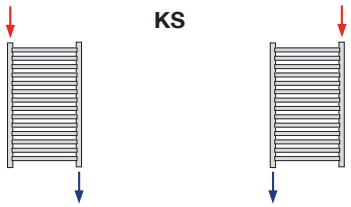

double - sided from the top down

KORALUX LINEAR EXCLUSIVE - M

Technical Data

Height H	900, 1220, 1500, 1820 mm
Length L	450, 600, 750 mm
Depth B	30 mm
Connecting pitch	50 mm
Connecting thread	6 x G 1/2 inside
Highest allowed working pressure	10 bar
Test presure	13 bar
Maximum water temperature	110 °C
Flow coefficient	A_T = 7,1 x 10^{-5} m^2
Coefficient of resistance	ξ_T = 16,0

Design

KORALUX LINEAR EXCLUSIVE - M (KLXM) is a chrome towel rail radiator modified for **bottom middle connection** with the connecting pitch of 50 mm.

Steel tubes	∅ 22 mm
Steel profile	40 x 30 mm

Fitting

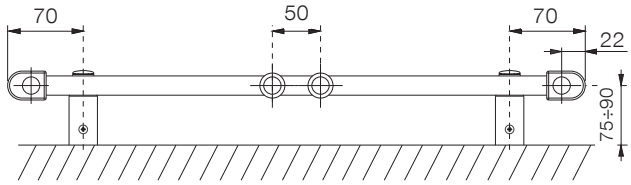

The delivered set for mounting on the wall contains 4 pcs of special plastic brackets in chrome, screws, dowel plugs and mounting instructions.

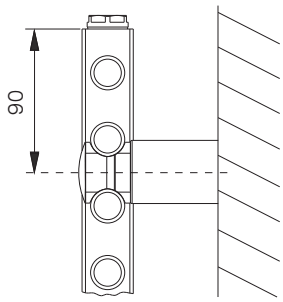

Type of Connection
KORALUX LINEAR EXCLUSIVE - M

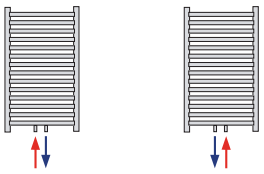

bottom middle*

* For radiators with the bottom middle connection you can use the integrated connection fittings HM delivered together with a thermostatic head (see page 39).

KORALUX RONDO EXCLUSIVE - M

Technical Data

Height H	900, 1220, 1500, 1820 mm
Length L	449, 595, 745 mm
Depth B	45, 60, 75 mm
Connecting pitch	50 mm
Connecting thread	6 x G 1/2 inside
Highest allowed working pressure	10 bar
Test presure	13 bar
Maximum water temperature	110 °C
Flow coefficient	A_T = 7,1 x 10^{-5} m^2
Coefficient of resistance	ξ_T = 16,0

Design

KORALUX RONDO EXCLUSIVE - M (KRXM) is a chrome towel rail radiator modified for **bottom middle connection** with the connecting pitch of 50 mm.

Steel tubes	∅ 22 mm
Steel profile	40 x 30 mm

Fitting

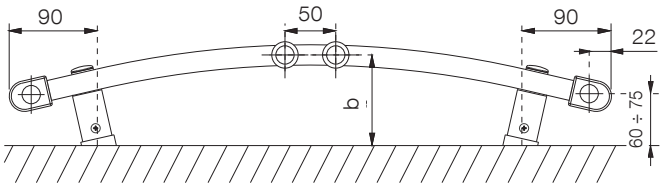

L [mm]	449	595	745
b [mm]	80 ÷ 95	90 ÷ 105	110 ÷ 125

The delivered set for mounting on the wall contains 4 pcs of special plastic brackets in chrome, screws, dowel plugs and mounting instructions.

Type of Connection
KORALUX RONDO EXCLUSIVE - M

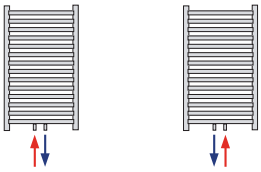

bottom middle*

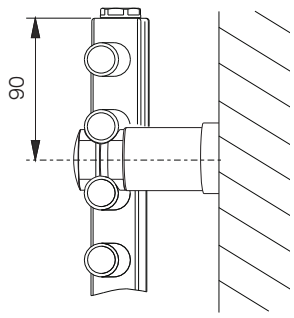

* For radiators with the bottom middle connection you can use the integrated connection fittings HM delivered together with a thermostatic head (see page 39).

KORALUX LINEAR EXCLUSIVE - M

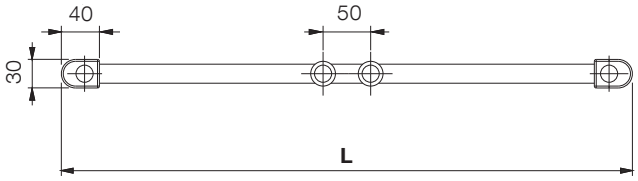

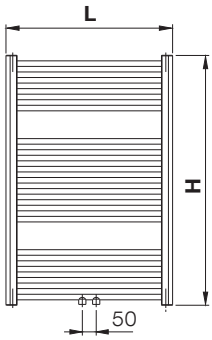

KLXM 900...

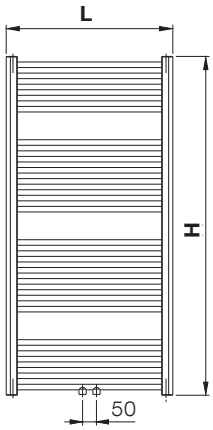

KLXM 1220...

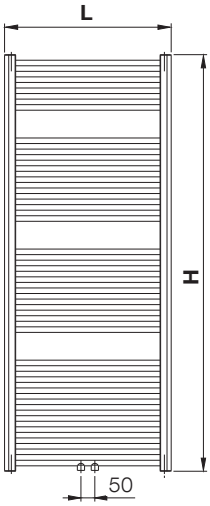

KLXM 1500...

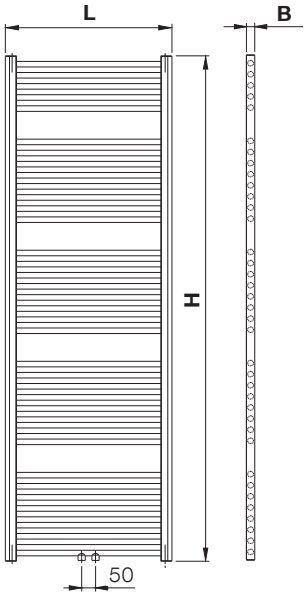

KLXM 1820...

KORALUX RONDO EXCLUSIVE - M

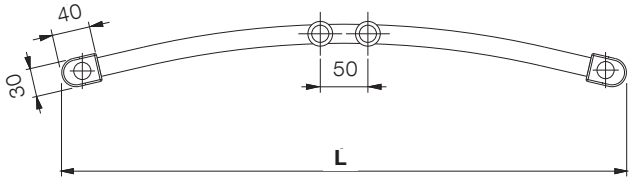

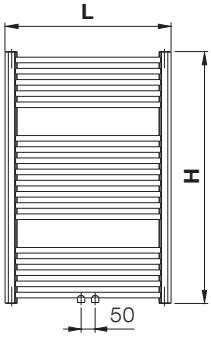

KRXM 900...

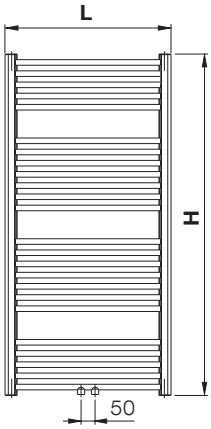

KRXM 1220...

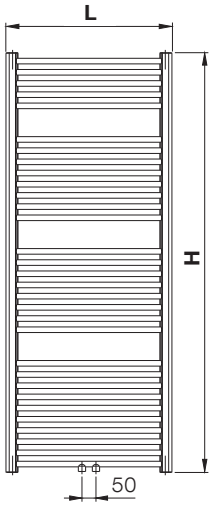

KRXM 1500...

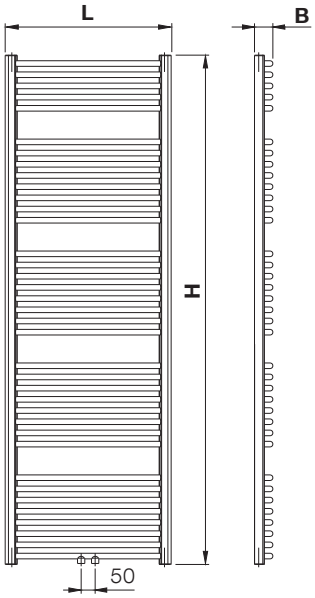

KRXM 1820...

KORALUX LINEAR EXCLUSIVE - M, RONDO EXCLUSIVE - M

HEAT OUTPUT Q [W] FOR WATER AS A HEAT-CARRYING AGENT CERTIFIED TO EN 442

BASIC TECHNICAL PARAMETERS

Model number	H [mm]	L [mm]	t_1/t_2 [°C]	Q [W] for t_i[°C]					Nominal heat output Q [W] (75/65/20°C)	Temperature exponent n [-]	Radiator weight M_T [kg]	Water volume V_T [l]	Max. heat output E - element P [W]*
				15	18	20	22	24					
KLXM 900.450	900	450	90/70	344	324	310	297	284	249	1,2519	5,8	3,8	-
KRXM 900.450		449	70/55	232	214	201	189	177					
			55/45	159	142	130	119	109					
KLXM 900.600	900	600	90/70	441	415	398	381	364	319	1,2522	7,0	5,0	200
KRXM 900.600		595	70/55	297	274	258	242	227					
			55/45	203	181	167	153	139					
KLXM 900.750	900	750	90/70	534	503	483	462	442	387	1,2526	8,2	6,3	200
KRXM 900.750		745	70/55	361	332	313	294	276					
			55/45	246	220	203	185	169					
KLXM 1220.450	1220	450	90/70	470	442	423	405	387	338	1,2769	8,0	5,3	200
KRXM 1220.450		449	70/55	315	289	272	256	239					
			55/45	213	190	175	160	145					
KLXM 1220.600	1220	600	90/70	601	565	542	518	495	433	1,2710	9,6	7,0	300
KRXM 1220.600		595	70/55	403	370	349	328	307					
			55/45	274	244	224	205	186					
KLXM 1220.750	1220	750	90/70	729	686	657	629	601	526	1,2650	11,2	8,8	300
KRXM 1220.750		745	70/55	490	450	424	399	373					
			55/45	334	297	274	250	227					
KLXM 1500.450	1500	450	90/70	581	546	524	501	479	419	1,2660	10,0	6,5	200
KRXM 1500.450		449	70/55	390	359	338	318	297					
			55/45	266	237	218	199	181					
KLXM 1500.600	1500	600	90/70	743	699	671	642	614	537	1,2607	12,4	8,6	300
KRXM 1500.600		595	70/55	500	460	434	407	382					
			55/45	341	304	280	256	233					
KLXM 1500.750	1500	750	90/70	901	848	814	779	745	652	1,2553	14,7	10,8	400
KRXM 1500.750		745	70/55	607	559	527	495	464					
			55/45	415	370	341	312	284					
KLXM 1820.450	1820	450	90/70	714	672	645	617	590	516	1,2625	12,2	7,8	300
KRXM 1820.450		449	70/55	481	442	416	391	367					
			55/45	327	292	269	246	223					
KLXM 1820.600	1820	600	90/70	915	862	826	791	756	662	1,2563	14,9	10,4	400
KRXM 1820.600		595	70/55	617	567	535	503	471					
			55/45	421	376	346	317	288					
KLXM 1820.750	1820	750	90/70	1107	1042	1000	957	916	802	1,2500	17,7	13,0	500
KRXM 1820.750		745	70/55	747	688	649	610	572					
			55/45	511	456	420	385	350					

* Stated maximum output values of the electric heating element apply for combined heating (see page 38)

Characteristic equation: $\Phi = K_T \bullet L^a \bullet H^b \bullet \Delta T^{(c_0+c_1 \cdot H)}$	K_T	a	b	c_0	c_1
	$2{,}48800 \times 10^{-5}$	0,863664	0,877900	1,21760	$3{,}06600 \times 10^{-5}$

Stated heat output values apply for the illustrated types of radiator connections:

KLXM, KRXM

bottom middle

Towel hanger for KORALUX

- designed for use with all models of KORALUX towel rail radiators except for the KORALUX STANDARD model
- simple fitting and removal
- manufactured from stainless steel
- the choice of length of the hanger **D1** depends on the length of the radiator **L**
- maximum vertical load on the hanger is **50 N** (up to 5 kg)
- the set contains 1 pc of the Towel hanger for KORALUX

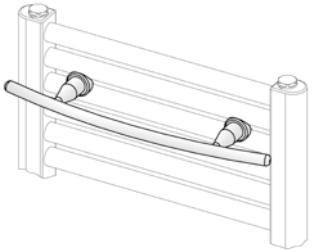

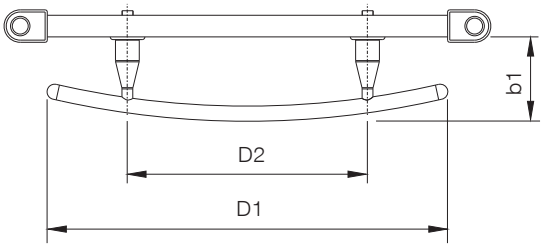

Type	D1 [mm]	D2 [mm]	b1 [mm]	Order number
Towel hanger for KORALUX 370	370	222	78	Z-D033
Towel hanger for KORALUX 518	518	370	93	Z-D034

Towel peg for KORALUX

- designed for use with all models of KORALUX towel rail radiators except for the KORALUX STANDARD model
- simple fitting and removal
- manufactured from stainless steel
- maximum vertical load on peg is **50 N** (up to 5 kg)
- the set contains 1 pc of the Towel peg for KORALUX

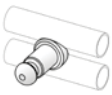

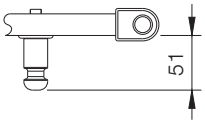

Type	Order number
Towel peg for KORALUX	Z-D037

Combined Heating

All KORALUX towel rail radiators connected to the heating system can be supplemented with electric heating element without the integrated temperature regulator Z-KTT-XXXX, or they can be used with the integrated temperature regulator Z-KTTR-XXXX.

This way a towel rail radiator for combined heating (warmwater – electricity) is created which can be used regardless of whether the heating system is in operation.

The basic version of these electric radiators is connected to the main distribution frame by a cable connected to the wiring box if the electric radiator does not have an integrated temperature regulator, a modified cable enabling direct connection to a socket can be used.

However, the accessories must be ordered according to the required comfort and economy levels and must be installed on the cable. The following accessories are primarily concerned:

- the VS1 plug with manual switch (order code Z-SKV-0002)
- the RE10A electric temperature regulator (order code Z-SKV-0004)

Basic Technical Data - Electric Radiators

Technical Data	Electric heating element without integrated temperature regulator Z-KTT-XXXX	Electric heating element with integrated temperature regulator Z-KTTR-XXXX
Switch	Yes*	Yes
Indication of operation	Yes*	Yes
Indication of fault condition	No	Yes
Thermostat	Yes**	Yes
Temperature limiter	Yes	Yes
Selection of operation modes	No	Yes
Rated voltage	230 V /50 Hz	230 V /50 Hz
Input range	200 ÷ 900 W	200 ÷ 900 W
Protection	IP 44	IP 44
Appliance class	1	1
Cable length	1,5 m	1,2 m
Connecting thread	G 1/2	G 1/2
Working position	Vertical model with the electric power supply at the bottom	Vertical model with the regulator on the bottom-left or bottom-right side
Optimization of service position	No	Yes

* applicable only when the VS1 plug or the RE10A temperature regulator are used

** applicable only when the RE10A temperature regulator is used

Basic Technical Data - Accessories

Technical Data	VS1 plug Z-SKV-0002	RE10A Temperature regulator Z-SKV-0004
Switch	Yes	Yes
Indication of operation	Yes	Yes
Thermostat	No	Yes
Selection of operation modes	No	Yes
Rated voltage	230 V /50 Hz	230 V /50 Hz
Protection	IP 41	IP 20
Working position	In compliance with General Safety Regulation	Vertical model with the lead-in cable at the bottom

Electric heating element

without integrated temperature regulator

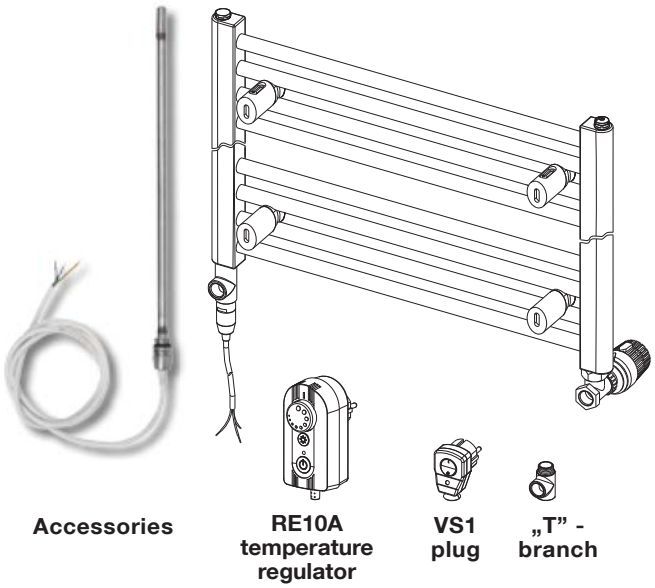

with integrated temperature regulator

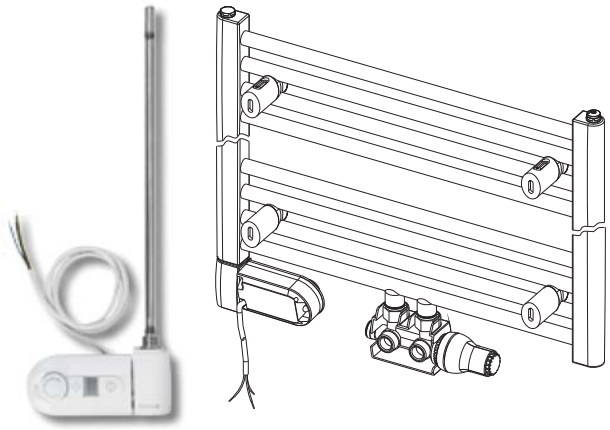

Warning for your safety:

- The installation and replacement of the heating element, replacement of the power cable and fitting of all electric accessories may be carried out only by a person with the required and valid professional qualification.
- The recommended (maximum) heat output values of the electric heating elements mentioned in the technical data sheet of each individual towel rail radiator KORALUX may not be exceeded.
- If the same outlet is used both for connection of the radiator to the heating system and for the installation of the electric heating element it is necessary to order the "T-branch" (article code Z-SKV-0001).
- The allowed working position is only vertical with the power cable below, that means the electric heating element may be inserted in the radiator only from below.
- The radiator may not be aerated and must be permanently connected to the heating system.
- Please study carefully the attached "Operating Instructions" where all principles and conditions of a safe operation of the radiator with combined heating are explained and highlighted clearly and demonstrably.

HM FITTING

Description

Connection fittings HM are specifically designed for connection of panel radiators RADIK MM and RADIK PLAN (LINE) VERTIKAL - M, i.e. radiators without valve and with bottom connection with a connecting pitch of 50 mm. They can also be used for all other KORALUX and KORATHERM radiators with the same type of connection to the heating system.

Connection fittings HM are specifically designed for connection of panel radiators RADIK MM and RADIK PLAN (LINE) VERTIKAL - M , i.e. radiators without.It is the integrated fittings, i.e. the body of the fittings has an integrated valve and an adjustable screw connection so it is possible to disconnect the radiator from the heating system without interrupting operation.

Connection fittings HM are specifically designed for connection of panel radiators RADIK MM and RADIK PLAN (LINE) VERTIKAL - M , i.e. radiators without.The fittings enable to preset the flow rate of the radiator, its closure at the inlet and outlet and thanks to the thermostatic head also regulation of the heat output of the radiator in relation to the temperature in the heated room. The presetting level is given by the number of turns on the plug of the adjustment screw connection from the “closed” position.Presetting of the regulation level is reproducible, i.e. when the flow is closed and then opened again, there is no change in the set regulation level.

Use

The fittings are designed for two-pipe pressurized heating systems. They can be used for the following range of KORADO radiators:

Product range	Radiator model
RADIK	RADIK PLAN VERTIKAL - M RADIK LINE VERTIKAL - M RADIK MM RADIK PREMIUM RADIK PLAN PREMIUM RADIK LINE PREMIUM
KORALUX	KORALUX LINEAR MAX - M KORALUX LINEAR COMFORT - M KORALUX LINEAR CLASSIC - M KORALUX LINEAR EXCLUSIVE - M
	KORALUX RONDO MAX - M KORALUX RONDO COMFORT - M KORALUX RONDO CLASSIC - M KORALUX RONDO EXCLUSIVE - M
KORATHERM	KORATHERM HORIZONTAL - M
	KORATHERM VERTIKAL - M

Note:
When using the stand brackets Z-U580, Z-U581 with radiator model KORATHERM HORIZONTAL-M it is possible to use the HM Connection Fittings from the length L = 700 mm.

Delivery equipment

The following parts of HM fittings are delivered as standard:
- integrated fittings in straight or angular design
- thermostatic head in white or chrome
- 2x reduction G 1/2 to G 3/4 with sealing “O” ring
- 2x flat sealing pieces from EPDM rubber
- assembly and operating instructions

Subject to special request, the following can be supplied:
- universal cover for the fittings in white
- universal cover for the fittings in chrome

Way of connection

Connection to the heating system is accomplished using a G 3/4 external thread and a clamp connection can be used for copper, plastic, precision steel or multilayer pipes.

Connection of the fittings to the radiator is accomplished with the aid of a self-sealing double nipple (reduction) G 1/2 to G 3/4, which is delivered as standard.

The valve on the fittings is equipped with M 30 x 1.5 external connection threading for mounting of the thermostatic head, which is delivered as standard with the HM Connection fitting.

How to order

HM FITTING

	Design	Colour of the thermostatic head	Order number
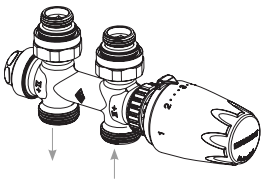	straight	white	Z-D023
		chrome	Z-D024
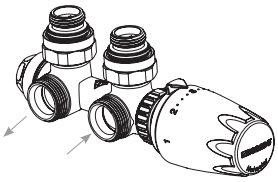	angular	white	Z-D025
		chrome	Z-D026

HM FITTING Cover

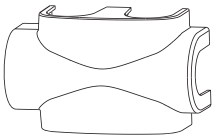	universal	white	Z-D027
		chrome	Z-D028

INFORMATION FOR ORDERING

KORALUX LINEAR MAX
KORALUX LINEAR MAX - M

Model number		H [mm]	L [mm]	Ordering code from 1.1.2017
KLM	700.450	690	450	KLM-070045-00-10
KLM	700.600	690	600	KLM-070060-00-10
KLM	700.750	690	750	KLM-070075-00-10
KLM	900.450	900	450	KLM-090045-00-10
KLM	900.600	900	600	KLM-090060-00-10
KLM	900.750	900	750	KLM-090075-00-10
KLM	1220.450	1215	450	KLM-122045-00-10
KLM	1220.600	1215	600	KLM-122060-00-10
KLM	1220.750	1215	750	KLM-122075-00-10
KLM	1500.450	1495	450	KLM-150045-00-10
KLM	1500.600	1495	600	KLM-150060-00-10
KLM	1500.750	1495	750	KLM-150075-00-10
KLM	1820.450	1810	450	KLM-182045-00-10
KLM	1820.600	1810	600	KLM-182060-00-10
KLM	1820.750	1810	750	KLM-182075-00-10
KLMM	700.450	690	450	KLM-070045-00M10
KLMM	700.600	690	600	KLM-070060-00M10
KLMM	700.750	690	750	KLM-070075-00M10
KLMM	900.450	900	450	KLM-090045-00M10
KLMM	900.600	900	600	KLM-090060-00M10
KLMM	900.750	900	750	KLM-090075-00M10
KLMM	1220.450	1215	450	KLM-122045-00M10
KLMM	1220.600	1215	600	KLM-122060-00M10
KLMM	1220.750	1215	750	KLM-122075-00M10
KLMM	1500.450	1495	450	KLM-150045-00M10
KLMM	1500.600	1495	600	KLM-150060-00M10
KLMM	1500.750	1495	750	KLM-150075-00M10
KLMM	1820.450	1810	450	KLM-182045-00M10
KLMM	1820.600	1810	600	KLM-182060-00M10
KLMM	1820.750	1810	750	KLM-182075-00M10

KORALUX RONDO MAX
KORALUX RONDO MAX - M

Model number		H [mm]	L [mm]	Ordering code from 1.1.2017
KRM	700.450	690	445	KLM-070045-00-10
KRM	700.600	690	595	KLM-070060-00-10
KRM	700.750	690	745	KLM-070075-00-10
KRM	900.450	900	445	KLM-090045-00-10
KRM	900.600	900	595	KLM-090060-00-10
KRM	900.750	900	745	KLM-090075-00-10
KRM	1220.450	1215	445	KLM-122045-00-10
KRM	1220.600	1215	595	KLM-122060-00-10
KRM	1220.750	1215	745	KLM-122075-00-10
KRM	1500.450	1495	445	KLM-150045-00-10
KRM	1500.600	1495	595	KLM-150060-00-10
KRM	1500.750	1495	745	KLM-150075-00-10
KRM	1820.450	1810	445	KLM-182045-00-10
KRM	1820.600	1810	595	KLM-182060-00-10
KRM	1820.750	1810	745	KLM-182075-00-10
KRMM	700.450	690	445	KLM-070045-00M10
KRMM	700.600	690	595	KLM-070060-00M10
KRMM	700.750	690	745	KLM-070075-00M10
KRMM	900.450	900	445	KLM-090045-00M10
KRMM	900.600	900	595	KLM-090060-00M10
KRMM	900.750	900	745	KLM-090075-00M10
KRMM	1220.450	1215	445	KLM-122045-00M10
KRMM	1220.600	1215	595	KLM-122060-00M10
KRMM	1220.750	1215	745	KLM-122075-00M10
KRMM	1500.450	1495	445	KLM-150045-00M10
KRMM	1500.600	1495	595	KLM-150060-00M10
KRMM	1500.750	1495	745	KLM-150075-00M10
KRMM	1820.450	1810	445	KLM-182045-00M10
KRMM	1820.600	1810	595	KLM-182060-00M10
KRMM	1820.750	1810	745	KLM-182075-00M10

KORALUX LINEAR COMFORT
KORALUX LINEAR COMFORT - M

Model number		H [mm]	L [mm]	Ordering code from 1.1.2017
KLT	700.450	700	450	KLT-070045-00-10
KLT	700.500	700	500	KLT-070050-00-10
KLT	700.600	700	600	KLT-070060-00-10
KLT	700.750	700	750	KLT-070075-00-10
KLT	900.450	900	450	KLT-090045-00-10
KLT	900.500	900	500	KLT-090050-00-10
KLT	900.600	900	600	KLT-090060-00-10
KLT	900.750	900	750	KLT-090075-00-10
KLT	1220.450	1220	450	KLT-122045-00-10
KLT	1220.500	1220	500	KLT-122050-00-10
KLT	1220.600	1220	600	KLT-122060-00-10
KLT	1220.750	1220	750	KLT-122075-00-10
KLT	1500.450	1500	450	KLT-150045-00-10
KLT	1500.500	1500	500	KLT-150050-00-10
KLT	1500.600	1500	600	KLT-150060-00-10
KLT	1500.750	1500	750	KLT-150075-00-10
KLT	1820.450	1820	450	KLT-182045-00-10
KLT	1820.500	1820	500	KLT-182050-00-10
KLT	1820.600	1820	600	KLT-182060-00-10
KLT	1820.750	1820	750	KLT-182075-00-10
KLTM	700.450	700	450	KLT-070045-00M10
KLTM	700.500	700	500	KLT-070050-00M10
KLTM	700.600	700	600	KLT-070060-00M10
KLTM	700.750	700	750	KLT-070075-00M10
KLTM	900.450	900	450	KLT-090045-00M10
KLTM	900.500	900	500	KLT-090050-00M10
KLTM	900.600	900	600	KLT-090060-00M10
KLTM	900.750	900	750	KLT-090075-00M10
KLTM	1220.450	1220	450	KLT-122045-00M10
KLTM	1220.500	1220	500	KLT-122050-00M10
KLTM	1220.600	1220	600	KLT-122060-00M10
KLTM	1220.750	1220	750	KLT-122075-00M10
KLTM	1500.450	1500	450	KLT-150045-00M10
KLTM	1500.500	1500	500	KLT-150050-00M10
KLTM	1500.600	1500	600	KLT-150060-00M10
KLTM	1500.750	1500	750	KLT-150075-00M10
KLTM	1820.450	1820	450	KLT-182045-00M10
KLTM	1820.500	1820	500	KLT-182050-00M10
KLTM	1820.600	1820	600	KLT-182060-00M10
KLTM	1820.750	1820	750	KLT-182075-00M10

KORALUX RONDO COMFORT
KORALUX RONDO COMFORT - M

Model number		H [mm]	L [mm]	Ordering code from 1.1.2017
KRT	700.450	700	445	KRT-070045-00-10
KRT	700.500	700	495	KRT-070050-00-10
KRT	700.600	700	595	KRT-070060-00-10
KRT	700.750	700	745	KRT-070075-00-10
KRT	900.450	900	445	KRT-090045-00-10
KRT	900.500	900	495	KRT-090050-00-10
KRT	900.600	900	595	KRT-090060-00-10
KRT	900.750	900	745	KRT-090075-00-10
KRT	1220.450	1220	445	KRT-122045-00-10
KRT	1220.500	1220	495	KRT-122050-00-10
KRT	1220.600	1220	595	KRT-122060-00-10
KRT	1220.750	1220	745	KRT-122075-00-10
KRT	1500.450	1500	445	KRT-150045-00-10
KRT	1500.500	1500	495	KRT-150050-00-10
KRT	1500.600	1500	595	KRT-150060-00-10
KRT	1500.750	1500	745	KRT-150075-00-10
KRT	1820.450	1820	445	KRT-182045-00-10
KRT	1820.500	1820	495	KRT-182050-00-10
KRT	1820.600	1820	595	KRT-182060-00-10
KRT	1820.750	1820	745	KRT-182075-00-10
KRTM	700.450	700	445	KRT-070045-00M10
KRTM	700.500	700	495	KRT-070050-00M10
KRTM	700.600	700	595	KRT-070060-00M10
KRTM	700.750	700	745	KRT-070075-00M10
KRTM	900.450	900	445	KRT-090045-00M10
KRTM	900.500	900	495	KRT-090050-00M10
KRTM	900.600	900	595	KRT-090060-00M10
KRTM	900.750	900	745	KRT-090075-00M10
KRTM	1220.450	1220	445	KRT-122045-00M10
KRTM	1220.500	1220	495	KRT-122050-00M10
KRTM	1220.600	1220	595	KRT-122060-00M10
KRTM	1220.750	1220	745	KRT-122075-00M10
KRTM	1500.450	1500	445	KRT-150045-00M10
KRTM	1500.500	1500	495	KRT-150050-00M10
KRTM	1500.600	1500	595	KRT-150060-00M10
KRTM	1500.750	1500	745	KRT-150075-00M10
KRTM	1820.450	1820	445	KRT-182045-00M10
KRTM	1820.500	1820	495	KRT-182050-00M10
KRTM	1820.600	1820	595	KRT-182060-00M10
KRTM	1820.750	1820	745	KRT-182075-00M10

INFORMATION FOR ORDERING

KORALUX LINEAR CLASSIC
KORALUX LINEAR CLASSIC - M

Model number		H [mm]	L [mm]	Ordering code from 1.1.2017
KLC	700.450	700	450	KLC-070045-00-10
KLC	700.500	700	500	KLC-070050-00-10
KLC	700.600	700	600	KLC-070060-00-10
KLC	700.750	700	750	KLC-070075-00-10
KLC	900.450	900	450	KLC-090045-00-10
KLC	900.500	900	500	KLC-090050-00-10
KLC	900.600	900	600	KLC-090060-00-10
KLC	900.750	900	750	KLC-090075-00-10
KLC	1220.450	1220	450	KLC-122045-00-10
KLC	1220.500	1220	500	KLC-122050-00-10
KLC	1220.600	1220	600	KLC-122060-00-10
KLC	1220.750	1220	750	KLC-122075-00-10
KLC	1500.450	1500	450	KLC-150045-00-10
KLC	1500.500	1500	500	KLC-150050-00-10
KLC	1500.600	1500	600	KLC-150060-00-10
KLC	1500.750	1500	750	KLC-150075-00-10
KLC	1820.450	1820	450	KLC-182045-00-10
KLC	1820.500	1820	500	KLC-182050-00-10
KLC	1820.600	1820	600	KLC-182060-00-10
KLC	1820.750	1820	750	KLC-182075-00-10
KLCM	700.450	700	450	KLC-070045-00M10
KLCM	700.500	700	500	KLC-070050-00M10
KLCM	700.600	700	600	KLC-070060-00M10
KLCM	700.750	700	750	KLC-070075-00M10
KLCM	900.450	900	450	KLC-090045-00M10
KLCM	900.500	900	500	KLC-090050-00M10
KLCM	900.600	900	600	KLC-090060-00M10
KLCM	900.750	900	750	KLC-090075-00M10
KLCM	1220.450	1220	450	KLC-122045-00M10
KLCM	1220.500	1220	500	KLC-122050-00M10
KLCM	1220.600	1220	600	KLC-122060-00M10
KLCM	1220.750	1220	750	KLC-122075-00M10
KLCM	1500.450	1500	450	KLC-150045-00M10
KLCM	1500.500	1500	500	KLC-150050-00M10
KLCM	1500.600	1500	600	KLC-150060-00M10
KLCM	1500.750	1500	750	KLC-150075-00M10
KLCM	1820.450	1820	450	KLC-182045-00M10
KLCM	1820.500	1820	500	KLC-182050-00M10
KLCM	1820.600	1820	600	KLC-182060-00M10
KLCM	1820.750	1820	750	KLC-182075-00M10

KORALUX RONDO CLASSIC
KORALUX RONDO CLASSIC - M

Model number		H [mm]	L [mm]	Ordering code from 1.1.2017
KRC	700.450	700	445	KRC-070045-00-10
KRC	700.500	700	495	KRC-070050-00-10
KRC	700.600	700	595	KRC-070060-00-10
KRC	700.750	700	745	KRC-070075-00-10
KRC	900.450	900	445	KRC-090045-00-10
KRC	900.500	900	495	KRC-090050-00-10
KRC	900.600	900	595	KRC-090060-00-10
KRC	900.750	900	745	KRC-090075-00-10
KRC	1220.450	1220	445	KRC-122045-00-10
KRC	1220.500	1220	495	KRC-122050-00-10
KRC	1220.600	1220	595	KRC-122060-00-10
KRC	1220.750	1220	745	KRC-122075-00-10
KRC	1500.450	1500	445	KRC-150045-00-10
KRC	1500.500	1500	495	KRC-150050-00-10
KRC	1500.600	1500	595	KRC-150060-00-10
KRC	1500.750	1500	745	KRC-150075-00-10
KRC	1820.450	1820	445	KRC-182045-00-10
KRC	1820.500	1820	495	KRC-182050-00-10
KRC	1820.600	1820	595	KRC-182060-00-10
KRC	1820.750	1820	745	KRC-182075-00-10
KRCM	700.450	700	445	KRC-070045-00M10
KRCM	700.500	700	495	KRC-070050-00M10
KRCM	700.600	700	595	KRC-070060-00M10
KRCM	700.750	700	745	KRC-070075-00M10
KRCM	900.450	900	445	KRC-090045-00M10
KRCM	900.500	900	495	KRC-090050-00M10
KRCM	900.600	900	595	KRC-090060-00M10
KRCM	900.750	900	745	KRC-090075-00M10
KRCM	1220.450	1220	445	KRC-122045-00M10
KRCM	1220.500	1220	495	KRC-122050-00M10
KRCM	1220.600	1220	595	KRC-122060-00M10
KRCM	1220.750	1220	745	KRC-122075-00M10
KRCM	1500.450	1500	445	KRC-150045-00M10
KRCM	1500.500	1500	495	KRC-150050-00M10
KRCM	1500.600	1500	595	KRC-150060-00M10
KRCM	1500.750	1500	745	KRC-150075-00M10
KRCM	1820.450	1820	445	KRC-182045-00M10
KRCM	1820.500	1820	495	KRC-182050-00M10
KRCM	1820.600	1820	595	KRC-182060-00M10
KRCM	1820.750	1820	745	KRC-182075-00M10

KORALUX LINEAR EXCLUSIVE - M

Model number		H [mm]	L [mm]	Ordering code from 1.1.2017
KLXM	900.450	900	450	KLX-090045-00M27
KLXM	900.600	900	600	KLX-090060-00M27
KLXM	900.750	900	750	KLX-090075-00M27
KLXM	1220.450	1220	450	KLX-122045-00M27
KLXM	1220.600	1220	600	KLX-122060-00M27
KLXM	1220.750	1220	750	KLX-122075-00M27
KLXM	1500.450	1500	450	KLX-150045-00M27
KLXM	1500.600	1500	600	KLX-150060-00M27
KLXM	1500.750	1500	750	KLX-150075-00M27
KLXM	1820.450	1820	450	KLX-182045-00M27
KLXM	1820.600	1820	600	KLX-182060-00M27
KLXM	1820.750	1820	750	KLX-182075-00M27

KORALUX RONDO EXCLUSIVE - M

Model number		H [mm]	L [mm]	Ordering code from 1.1.2017
KRXM	900.450	900	449	KRX-090045-00M27
KRXM	900.600	900	595	KRX-090060-00M27
KRXM	900.750	900	745	KRX-090075-00M27
KRXM	1220.450	1220	449	KRX-122045-00M27
KRXM	1220.600	1220	595	KRX-122060-00M27
KRXM	1220.750	1220	745	KRX-122075-00M27
KRXM	1500.450	1500	449	KRX-150045-00M27
KRXM	1500.600	1500	595	KRX-150060-00M27
KRXM	1500.750	1500	745	KRX-150075-00M27
KRXM	1820.450	1820	449	KRX-182045-00M27
KRXM	1820.600	1820	595	KRX-182060-00M27
KRXM	1820.750	1820	745	KRX-182075-00M27

KORALUX STANDARD

Model number		H [mm]	L [mm]	Ordering code from 1.1.2017
KS	700.400	700	400	KSC-070040-00-10
KS	700.500	700	500	KSC-070050-00-10
KS	700.600	700	600	KSC-070060-00-10
KS	900.400	900	400	KSC-090040-00-10
KS	900.500	900	500	KSC-090050-00-10
KS	900.600	900	600	KSC-090060-00-10
KS	1220.400	1220	400	KSC-122040-00-10
KS	1220.500	1220	500	KSC-122050-00-10
KS	1220.600	1220	600	KSC-122060-00-10
KS	1500.400	1500	400	KSC-150040-00-10
KS	1500.500	1500	500	KSC-150050-00-10
KS	1500.600	1500	600	KSC-150060-00-10

Table for Creation of a Code

KMM-HHHLLL-00-NXY

- colour code
- way of connection
- nominal dimensions
- model number

INFORMATION FOR ORDERING

KORALUX LINEAR MAX - E
KORALUX RONDO MAX - E

Model number		H [mm]	L [mm]	Ordering code from 1.1.2017
KLME	700.450	690	450	KLM-070045-00E10
KLME	700.600	690	600	KLM-070060-00E10
KLME	700.750	690	750	KLM-070075-00E10
KLME	900.450	900	450	KLM-090045-00E10
KLME	900.600	900	600	KLM-090060-00E10
KLME	900.750	900	750	KLM-090075-00E10
KLME	1220.450	1215	450	KLM-122045-00E10
KLME	1220.600	1215	600	KLM-122060-00E10
KLME	1220.750	1215	750	KLM-122075-00E10
KLME	1500.450	1495	450	KLM-150045-00E10
KLME	1500.600	1495	600	KLM-150060-00E10
KLME	1500.750	1495	750	KLM-150075-00E10
KLME	1820.450	1810	450	KLM-182045-00E10
KLME	1820.600	1810	600	KLM-182060-00E10
KLME	1820.750	1810	750	KLM-182075-00E10
KRME	700.450	690	445	KRM-070045-00E10
KRME	700.600	690	595	KRM-070060-00E10
KRME	700.750	690	745	KRM-070075-00E10
KRME	900.450	900	445	KRM-090045-00E10
KRME	900.600	900	595	KRM-090060-00E10
KRME	900.750	900	745	KRM-090075-00E10
KRME	1220.450	1215	445	KRM-122045-00E10
KRME	1220.600	1215	595	KRM-122060-00E10
KRME	1220.750	1215	745	KRM-122075-00E10
KRME	1500.450	1495	445	KRM-150045-00E10
KRME	1500.600	1495	595	KRM-150060-00E10
KRME	1500.750	1495	745	KRM-150075-00E10
KRME	1820.450	1810	445	KRM-182045-00E10
KRME	1820.600	1810	595	KRM-182060-00E10
KRME	1820.750	1810	745	KRM-182075-00E10

KORALUX LINEAR CLASSIC - E
KORALUX RONDO CLASSIC - E

Model number		H [mm]	L [mm]	Ordering code from 1.1.2017
KLCE	700.600	700	600	KLC-070060-00E10
KLCE	700.750	700	750	KLC-070075-00E10
KLCE	900.450	900	450	KLC-090045-00E10
KLCE	900.500	900	500	KLC-090050-00E10
KLCE	900.600	900	600	KLC-090060-00E10
KLCE	900.750	900	750	KLC-090075-00E10
KLCE	1220.450	1220	450	KLC-122045-00E10
KLCE	1220.500	1220	500	KLC-122050-00E10
KLCE	1220.600	1220	600	KLC-122060-00E10
KLCE	1220.750	1220	750	KLC-122075-00E10
KLCE	1500.450	1500	450	KLC-150045-00E10
KLCE	1500.500	1500	500	KLC-150050-00E10
KLCE	1500.600	1500	600	KLC-150060-00E10
KLCE	1500.750	1500	750	KLC-150075-00E10
KLCE	1820.450	1820	450	KLC-182045-00E10
KLCE	1820.500	1820	500	KLC-182050-00E10
KLCE	1820.600	1820	600	KLC-182060-00E10
KLCE	1820.750	1820	750	KLC-182075-00E10
KRCE	700.600	700	595	KRC-070060-00E10
KRCE	700.750	700	745	KRC-070075-00E10
KRCE	900.450	900	445	KRC-090045-00E10
KRCE	900.500	900	495	KRC-090050-00E10
KRCE	900.600	900	595	KRC-090060-00E10
KRCE	900.750	900	745	KRC-090075-00E10
KRCE	1220.450	1220	445	KRC-122045-00E10
KRCE	1220.500	1220	495	KRC-122050-00E10
KRCE	1220.600	1220	595	KRC-122060-00E10
KRCE	1220.750	1220	745	KRC-122075-00E10
KRCE	1500.450	1500	445	KRC-150045-00E10
KRCE	1500.500	1500	495	KRC-150050-00E10
KRCE	1500.600	1500	595	KRC-150060-00E10
KRCE	1500.750	1500	745	KRC-150075-00E10
KRCE	1820.450	1820	445	KRC-182045-00E10
KRCE	1820.500	1820	495	KRC-182050-00E10
KRCE	1820.600	1820	595	KRC-182060-00E10
KRCE	1820.750	1820	745	KRC-182075-00E10

Combined heating - accessories

Name	Ordering code from 1.1.2017
„T" - branch	Z-SKV-0001
VS1 plug	Z-SKV-0002
RE10A temperature regulator	Z-SKV-0004

KORALUX LINEAR COMFORT - E
KORALUX RONDO COMFORT - E

Model number		H [mm]	L [mm]	Ordering code from 1.1.2017
KLTE	700.500	700	500	KLT-070050-00E10
KLTE	700.600	700	600	KLT-070060-00E10
KLTE	700.750	700	750	KLT-070075-00E10
KLTE	900.450	900	450	KLT-090045-00E10
KLTE	900.500	900	500	KLT-090050-00E10
KLTE	900.600	900	600	KLT-090060-00E10
KLTE	900.750	900	750	KLT-090075-00E10
KLTE	1220.450	1220	450	KLT-122045-00E10
KLTE	1220.500	1220	500	KLT-122050-00E10
KLTE	1220.600	1220	600	KLT-122060-00E10
KLTE	1220.750	1220	750	KLT-122075-00E10
KLTE	1500.450	1500	450	KLT-150045-00E10
KLTE	1500.500	1500	500	KLT-150050-00E10
KLTE	1500.600	1500	600	KLT-150060-00E10
KLTE	1500.750	1500	750	KLT-150075-00E10
KLTE	1820.450	1820	450	KLT-182045-00E10
KLTE	1820.500	1820	500	KLT-182050-00E10
KLTE	1820.600	1820	600	KLT-182060-00E10
KLTE	1820.750	1820	750	KLT-182075-00E10
KRTE	700.500	700	495	KRT-070050-00E10
KRTE	700.600	700	595	KRT-070060-00E10
KRTE	700.750	700	745	KRT-070075-00E10
KRTE	900.450	900	445	KRT-090045-00E10
KRTE	900.500	900	495	KRT-090050-00E10
KRTE	900.600	900	595	KRT-090060-00E10
KRTE	900.750	900	745	KRT-090075-00E10
KRTE	1220.450	1220	445	KRT-122045-00E10
KRTE	1220.500	1220	495	KRT-122050-00E10
KRTE	1220.600	1220	595	KRT-122060-00E10
KRTE	1220.750	1220	745	KRT-122075-00E10
KRTE	1500.450	1500	445	KRT-150045-00E10
KRTE	1500.500	1500	495	KRT-150050-00E10
KRTE	1500.600	1500	595	KRT-150060-00E10
KRTE	1500.750	1500	745	KRT-150075-00E10
KRTE	1820.450	1820	445	KRT-182045-00E10
KRTE	1820.500	1820	495	KRT-182050-00E10
KRTE	1820.600	1820	595	KRT-182060-00E10
KRTE	1820.750	1820	745	KRT-182075-00E10

Combined heating - Electric heating elements

Electric heating element without integrated temperature regulator		Electric heating element with integrated temperature regulator	
Output [W]	Order code	Output [W]	Order code
200	Z-KTT-0200	200	Z-KTTR-0200
300	Z-KTT-0300	300	Z-KTTR-0300
400	Z-KTT-0400	400	Z-KTTR-0400
500	Z-KTT-0500	500	Z-KTTR-0500
600	Z-KTT-0600	600	Z-KTTR-0600
700	Z-KTT-0700	700	Z-KTTR-0700
800	Z-KTT-0800	800	Z-KTTR-0800
900	Z-KTT-0900	900	Z-KTTR-0900
1000	Z-KTT-1000	1000	Z-KTTR-1000
1200	Z-KTT-1200	1200	Z-KTTR-1200
1350	Z-KTT-1350	1350	Z-KTTR-1350

Table for Creation of a Code

Z - KTT - XXXX

- Output in W
- Electric heating element without integrated temperature regulator

Z - KTTR - XXXX

- Output in W
- Electric heating element with integrated temperature regulator

SVÚOM PRAHA – INFORMATION

(I.E. STATE RESEARCH INSTITUTE FOR PROTECTION OF MATERIALS)

The below given information defines conditions for appropriate using steel radiators which are protected with final surface finish in accordance with DIN 55 900 standard. It also specifies critical locations, spaces and environment limiting their applications. KORADO, a.s. (joint-stock co.) recommends the below given advice to be strictly respected at all practical applications because this will be taken into consideration in case of judgement and evaluation of any future claims and/or complaints.

POSSIBILITIES AND LIMITATIONS FOR USING STEEL RADIATORS WITH SURFACE FINISH ACCORDING TO DIN 55 900 STANDARD:

(Explicit comment from the Prague State Research Institute for Protection of Materials)

1. REQUIREMENTS FOR SURFACE FINISH OF RADIATORS

1.1 General

The requirements concerning the surface finish of radiators are defined in German standard DIN 55 900 which bears the following title: "Surface finish of radiators. Terminology, requirements, tests. Surface finish made industrially." The said standard relates to materials which are used for surface finish of radiators and it is binding for industrially made surface finish of radiators for hot water heating and low pressure steam heating (temperature of the heat-carrying medium up to 120 °C). The object of the said standard in not surface finish of radiators

operating with temperatures exceeding 120 °C or which are to be used in spaces with aggressive and/or humid environment air. Kitchens, bathrooms etc. and places outside the reach of water shower spraying and toilets are not considered to be spaces with aggressive and/or humid environment air.

The DIN 55 900 standard is divided into 2 parts: DIN 55 900-1 defines the base paint layer for radiators, DIN 55 900-2 defines the final surface finish of radiators. The said standard specifies reguirements on paint coating materials applicable for surface finish, i.e. both their physical-mechanical properties (adhesion, impact resistance)and corrosion resistance (resistance against condensating water).

In general terms, the said standard also requires that radiators with final paint coating must be protected appropriately for and during: transportation, storage, and mounting, and it must be possible to clean the radiators surface with common detergents (non abbrasive).
The said standard is the basis for definition and assessment of the surface finish quality and for compliance with all principles therein stipulated, all of which is binding both for manufacturers and users of radiators. B reach of the scope of the standard DIN 55 900 by the user may be the cause of extinction of the producer´s quarantees.

2. QUALITATIVE DESCRIPTION OF TYPICAL ENVIRONMENTS

The qualitative description of typical environments with relevant grades of corrosivity is given in the table under the following title:
Qualitative description of typical environments for judgement of corrosivity grades:

Corrosivity grade	Corrosivity	Examples of typical interior environments
C-1	Very low	Heated spaces with relative low humidity (30 – 65 %) and with negligible uncleanliness, e.g. office premises, schools, museums, flats, hotels, shops, etc.
C-2	Low	Unsufficiently heated spaces with changeable temperature and with relative humidity exceeding 70 %. Rare occurrence of condensation and minor uncleanliness, e.g. warehouses, corridors, gym halls, etc.
C-3	Average	Spaces with average occurrence of condensation and with average uncleanliness caused by technological or other processes, e.g. food production premises, laundry plants, breweries, dairy houses, meat packing factories, etc.
C-4	High	Spaces with high occurrence of condensation and with average uncleanliness caused by technological or other processes, e.g. industrial manufacturing premises, swimming pools, bath houses, car-washing facilities, public WCs, stables, etc..
C-5	Very High	Spaces with nearly constant occurrence of condensation and/or with high uncleanliness caused by technological processes, e.g. mining premises, underground technological spaces/ rooms/halls, unaired shelters in tropical humid areas.

The radiators with surface finish complying with the DIN 55 900 standard are applicable in spaces/premises with C 1 interior air environment without limitation for a long period of service.

However, pursuant to the DIN 55 900-2 standard, the radiators must not be placed in spaces with aggressive or humid environment air (C2 – C5). Any placement of such radiators in the lower defined spaces must be considered as critical.

3. POSSIBILITIES AND LIMITATIONS FOR USING STEEL RADIATORS WITH SURFACE FINISH COMPLYING WITH DIN 55 900 STANDARD:

3.1 Spaces with possible water spray or water solutions spray

In spaces/premises with the C1 interior environment air, e.g. in flats, offices, schools and other public buildings, there are also some rooms (kitchens, bathrooms, toilets) wherein some places with corrosion activity of C2 – C5 can be found.

These are places within a direct reach of water spray or water solutions spray (e.g. places under kitchen sinks, under wash-basins, under showers, and some other places which are regularly sprayed with water). Such places are considered as spaces with humid or aggressive environment air and they are not suitable for placing radiators there even though the whole rooms in question (i.e. kitchens, bathrooms, toilets) are not considered to have aggressive or humid environment air.

That is why the guaranty claims resulting from the title of corrosion or from a change of the surface appearance cannot be applied on those radiators which are placed within reach of water spray or within reach of aggressive solutions (C2 – C5 spaces). In case it is necessary to place radiators within such a reach or in the middle of such an area, special protective measures must be applied (e.g. using zinc-coated or corrosion more resistant sheets, appropriate encasing etc.) which prevent corrosion damage of the surface finish of the radiators in question.

Radiators with surface finish complying with the DIN 55 900 standard can thus be installed in kitchens, bathrooms and toilets, provided they are located in the suitable place of the room.

3.2 Spaces which are unsufficiently air-ventilated

These are rooms (spaces with C2 interior environment air and higher) with windows which are never opened or rooms without windows where no sufficient air exchange can be achieved and maintained. In such spaces, humidity from air can often condensate on turned-off and therefore cold radiators. This condensated humidity can damage the protective coating due to corrosion or blistering.

Regular air-ventilation of the heated rooms/premises is the necessary protection of the surface finish of radiators against humidity and condensated water. It is not recommended, as a kind of protection against condensated humidity, to turn off radiators which are placed in unsufficiently air-ventilated rooms.

Using radiators complying with the surface finish according to DIN 55 900 inside bathrooms, toilets and launderettes (without windows) is possible only if air-ventilation is maintained in accordance with DIN 18 017 standard, Part 1 and Part 3, wherein hour exchanges of air volumes are defined. Analogically, requirements re. temperature-humidity microclimate are given in ČSN EN ISO 7730 standard.

If no regular air-ventilation is possible, or if no permanent air exchange can be achieved, radiators must be in continuous operation so that cooling down of such surfaces is prevented where air humidity would condensate.

Users of such unaired and humid rooms (e.g bathrooms, launderettes) must respect this fact. C losed rooms with installed radiators must be heated or air-ventilated regularly. Requirements defining air-ventilation of flats or houses are given in the following table:

Room	Air exchange rate
Kitchen	50 l/s – during operation 12 l/s – with permanent air-ventilation or with opened windows
Bathroom, toilet	25 l/s – when being used 10 l/s – with permanent air-ventilation or with opened windows
Garage a) separate b) shared	50 l/s – separate 7,5 l/s car – shared

3.3 Spaces with permanent increased humidity or aggressivity of environment air

This relates to critical rooms and premises (C2 – C5), i.e. swimming pools, saunas, public toilets, car-washing facilities, laundry plants, battery recharging workshops, various premises in chemical and food processing industries, and rooms and spaces where wet cleaning is carried out by means of low or high pressure equipment etc. The radiators complying with DIN 55 900 are not suitable for application in such premises.
If the said radiators are still to be installed into such difficult conditions, it is necessary to consult the manufacturer for the best possible placement of the radiators and to set limitations for usage of these radiators with standard surface finish. Inside the above mentioned critical premises there are usually also places with the corrossion impact of grade C1, such as offices, changing rooms, workshops, dining halls etc. wherein the radiators complying with DIN 55 900 can be applied without limitations.

4. STORING OF RADIATORS AND MOUNTING OF RADIATORS

The DIN 55 900 standard requires that radiators provided with the final surface coating must be appropriately protected for and during transportation and for storage and mounting and that it must be possible to clean the radiators surface with common detergents.
The following advice is to be respected.

4.1 Transportation

During transportation but also during storage and final mounting of radiators, it is necessary to prevent any damage of the radiator coating and/or of all covering elements. No damage caused by rain or by any aggressive impurities may occur.

4.2 Storage

Radiators provided with final surface finish must be stored at the user's in dry and well air-ventilated spaces so that no corrosion damage of the radiators surface finish occurs.

4.3 Protection of the surface finish during mounting

Mounting of the radiators is to be carried out in such a manner that the protective wrapping is removed only after all building construction jobs (e.g. floor tiling, concrete works, wall painting/ decorating and cleaning) has been finished in order to prevent any damage of radiators, especially any damage of their surface finish. The radiators can be mounted and put into operation without removing the protective wrapping.

4.4 Cleaning

Radiators with final surface finish can be cleaned with such suitable water-borne detergents which are commonly used in households without any adverse impact on the painted surface. Such detergents must neither be abrasive (they would abrade the surface) nor strongly alkaline or acidic (i.e. chemically aggressive).

Quality of Towel Rail Radiators KORALUX

- **Quality management system according to ISO 9001:2008**
  - guarantees the highest degree in achieving a permanent quality of products and all activities of KORADO, a.s. company on European as well as world-wide markets

- **Quality mark NF for the French market**
  - it is valid for the following range of towel rail radiators KORALUX

Reg. No. CERTITA	Model
5247	KORALUX LINEAR CLASSIC
5248	KORALUX RONDO CLASSIC

Towel Rail Radiators KORALUX - safety and conformity with the European directives and standards

- **European standard EN 442 for radiators**

- by using **CE mark** the producer confirms that the towel rail radiators KORALUX are in conformity with the characteristics stated in the Declaration of Performance issued in conformity with the directive of EP and the Council (EU) No. 305/2011. This conformity was approved by the notified body No.1015, Strojírenský zkušební ústav, s.p. Brno.

Service for business partners

An expert for every situation – that is one of the basic ideas of the philosophy of the company KORADO, a.s. with regard to service. The company KORADO, a.s. pays great attention to communication with its partners on the market. It offers designers, merchants, and installers of heating systems broad support and complete technical documentation and information for daily work. The goal is clear and comprehensible – to create conditions allowing individual professional groups to design, sell, and fit RADIK, KORALUX and KORATHERM radiators so that the final customer can take advantage of their features to a full extent. To fulfill this philosophy, the company KORADO, a.s. offers:

- technical catalogues for RADIK steel panel radiators, KORALUX towel rail radiators, KORATHERM design radiators, KORAMONT fitting technology catalogue
- range of brochres and information leaflets for individual models of radiators, supplements and accessories
- Internet web page **http://www.korado.com**
- e-mail **info@korado.cz**
- professional lectures at the company training center
- professional consulting at specialized exhibitions in the Czech Republic and abroad
- The up-to-date offer is available and regularly updated on www.korado.com.

COLOUR CARD

code 10
White RAL 9016

code 40
Alloy Black

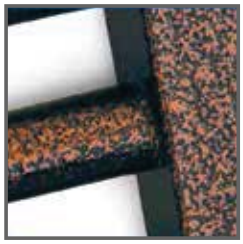

code 45
Pearl Brown

code 35
Silber RAL 9006

code 42
Gold

code 32
Anthrazit Metallic

code 14
Jasmine

code 26
Pergamon

code 16
Bahama

code 22
Manhattan

code 37
Red RAL 3001

code 39
Black RAL 9005

Notice:
The colour of the radiator may vary in comparison with the colour shown in the KORALUX colour card.
The standard paint finish is white RAL 9016, other colours from KORADO colour range with an extra charge 20 %.
Radiators can be ordered also in other colours from RAL colour range under the ordering code 99 with an extra charge 30 %.

The quality marks are valid for the range listed on page 45.

KORADO, a.s.
Bří Hubálků 869
560 02 Česká Třebová
Czech Republic

e-mail: info@korado.cz
www.korado.com

Ev. č.: 02/17.11.3.15 EN